Advanced Integrated Fire Protection System

TOTALPAC® N_2

Owner's Operation

and

Maintenance Manual

DOUBLE INTERLOCK PREACTION SYSTEM

ELECTRIC/PNEUMATIC RELEASE

AND

CORROSION INHIBITING SYSTEM

Engineered Corrosion Solutions

FM-076E-0-80B

Copyright © 2026 FIREFLEX Systems Inc.

All Rights Reserved

Reproduction or use of any portion of this manual without express written permission from FIREFLEX Systems Inc. is prohibited. While all reasonable efforts have been taken in the preparation of this manual to assure its accuracy, FIREFLEX Systems Inc. assumes no liability resulting from any errors or omissions in this manual, or from the use of the information contained herein. TOTALPAC® is a registered trademark of FIREFLEX Systems Inc.

FIREFLEX Systems Inc. reserves the right to make changes to this manual and the data sheets herewith at any time, without prior notification.

Table of Contents

Double Interlock Preaction System - Electric/Pneumatic Release and Corrosion Inhibiting System

General Section ..... Section **A**

1- General description
2- Listings and approvals
3- Applicable standards
4- Environment
5- Features
6- Configuration description
7- System release

Mechanical Section ..... Section **B**

1- Installation, operation & maintenance instructions
  1.1 Installation
  1.2 Preliminary inspection before placing the system in service
  1.3 Placing the system in service
  1.4 System operation
  1.5 Emergency instructions
  1.6 Placing the system back in service after operation
  1.7 Inspections & tests
  1.8 Maintenance
2- Preaction and corrosion inhibiting system trim
  2.1 Normal condition

Trim Options ..... Section **C**

1- Shut-off valve & sight glass
2- Semi and full flanged option
3- Anti-column device option
4- **ECS**® Nitrogen Purity Sensor
5- **ECS**® in-line corrosion detector

Air Supply ..... Section **D**

1- Cabinet air supplies
2- Operation
3- Maintenance and inspection
4- Air supply options

Control Section ..... Section **E**

1- Self-contained unit with release control panel
- 1.1 Product description
- 1.2 Self-contained unit with Viking VFR-500 release control panel
- 1.3 Technical data
- 1.4 Visual Indicators
- 1.5 Control buttons
- 1.6 Time and date settings

2- Remotely controlled unit without release control panel
- 2.1 Product description
- 2.2 Technical data

3- **N_2 ECS**® nitrogen generation control panel
- 3.1 Product description
- 3.2 Technical data
- 3.3 **N_2 ECS**® controls
- 3.4 PSV-D SMART vent assembly

Electrical Section ..... Section **F**

1- Self-contained configurations

2- Optional modules

3- Remotely controlled configuration

Dimensional Data & Cabinet ..... Section **G**

1- Cabinet unit

Limited Warranty ..... Section **H**

Integrated Fire Protection System

General Section - Double Interlock Preaction System - Electric/Pneumatic Release

A

1- General description

This ***TOTALPAC® N2*** integrated fire protection system by *FIREFLEX* Systems Inc. consists of a preaction system trim totally pre-assembled, pre-wired and factory tested, combined with a nitrogen generator. All electrical and mechanical components of the system are contained in one single unit.

The nitrogen generator is an **ECS®** AG-950-FF system, manufactured by Engineered Corrosion Solutions.

The only connections required for installation are the water supply inlet, the water discharge outlet, the main drain, the detection network, the electrical trouble, supervisory and alarm connections, as well as the AC power lines for the release control panel, **ECS®** AG-950-FF system and optional air compressor. The discharge outlet is connected to a fixed piping network of automatic sprinklers. Water is the extinguishing agent.

On system piping network, closed heat sensitive automatic sprinklers are spaced and located in accordance with recognized installation standards in order to detect a fire. Only those sprinklers immediately over or near to fire operate, minimizing water damage.

Double interlock preaction system with electric/pneumatic release uses closed automatic sprinklers on the system piping network, which is supervised with nitrogen pressure. The detection network is installed in parallel with the system piping network and is designed to operate before an automatic sprinkler fuses from the system piping network. Detection system operates first and gives an alarm signal.

Double interlock preaction system is designed so the deluge valve will open when both detector on detection network activates and a loss of pressure in the system piping network occurs. When the deluge valve opens, water will flow into the system piping network and out of any open automatic sprinklers and other opening on the system piping network.

Under normal supervisory condition, a loss of pressure alone in the system piping network will only give a supervisory signal.

Note: Every ***TOTALPAC® N2*** unit is identified with its unique serial number. This number is located on an adhesive label inside the main door panel and is used to maintain a record in our computerized data base. Have this serial number handy when calling for information on your unit (format is TN####).

2- Listings and approvals

In addition to being fabricated and tested under tight ISO-9001 manufacturing and quality control procedures, your ***TotalPac® N2*** unit uses UL/ULC and/or FM approved components and has also been tested and approved by recognized laboratories.

Here is the list of Listings & Approvals it meets:

- Factory Mutual Research <FM>: Preaction ***TotalPac® N2*** systems are FM Approved under the heading: "Automatic Sprinkler Systems" when installed with specific components.

WARNING Any unauthorized modification or addition made on-site to a factory built unit may void the unit's warranty. Consult your nearest *FIREFLEX* Systems authorized distributor before proceeding with such modifications or additions.

3- Applicable standards

The ***TOTALPAC® N2*** complies with the following standards:

- NFPA-13 Sprinkler Systems
- NFPA-15 Water Spray Fixed Systems
- NFPA-72 Fire Alarm Systems

Before installation, the contractor installing the unit shall also be familiar with the following documents and standards:

- Applicable Local & State Building Codes
- Any additional requirements of the Local Authority Having Jurisdiction

4- Environment

TOTALPAC® N2 unit shall be installed in a dry and clean location. Verify that all equipment is properly heated and protected to prevent freezing and physical damage. Refer to section **E** CONTROLS for environment data.

The unit and its components must be kept free of foreign matter, freezing conditions, corrosive atmospheres, contaminated water supplies, and any condition that could impair its operation or damage the components.

The frequency of the inspections and maintenance will vary depending on these environmental conditions as well as the condition of the air supply to the system. The owner is responsible for maintaining the fire protection system and devices in proper operating condition. Refer to section **B** MECHANICAL for maintenance instructions.

5- Features

5.1 General features

The ***TOTALPAC® N2*** unit manufactured by *FIREFLEX* Systems Inc. which has developed and introduced the concept of integrated fire protection systems.

Main features are:

- Trouble free design for safe and easy application
- Available in 4 sizes from 2" (50 mm) to 6" (150 mm) diameter
- Uses Engineered Corrosion Solutions® AG-950-FF, the best value in nitrogen generation technology
- Limits the liability of early pipe replacement
- Significant cost savings by using black pipe in combination with nitrogen
- Uses the Viking deluge valve
- Compact, aesthetic and easy to move
- User-friendly standardized owner's manual with every unit
- Unique serial number on every unit
- Uses only c-UL-us Listed and FM Approved components
- Designed in accordance with NFPA Standards
- Trim is fully assembled and tested at the factory
- All trims are galvanized steel, Listed and Approved for 250 PSI (1724 kPa) service maximum
- Quick connections to water supply and drain on both sides, and sprinkler riser on top of unit, all available with grooved end or flanged fittings
- No open drain cup inside unit
- Sturdy 14 gauge steel cabinet, painted fire red with oven baked polyester powder on phosphate base
- Textured rust proof finish
- Neoprene gasket on all doors to eliminate vibrations
- Separate unlocked access hatch to emergency manual release
- Key-alike locks on all cabinet doors
- Manufactured under ISO-9001 quality control procedures

5.2 ECS® AG-950-FF nitrogen generator features

- Handles up to 950 gallons (3596 litres) of nitrogen for sprinkler piping capacity
- Initial sprinkler piping capacity lower than 235 gallons (890 litres) only requires the **ECS**® AG-950-FF compressor
- Fully automatic with pressure monitoring
- Pre-filters and pressure regulator
- Control panel with gauges, hour meter and power, fast fill and vent switches

6- Configuration description

TOTALPAC® N2 preaction system is built around the Viking trim using straight through deluge valve model F-1 (model F-2 is the Halar® coated version for use in corrosive environments).

The valve is rated up to a maximum of 250 PSI WWP (1724 kPa) and is available in the following diameters:

- ▶ 2" (50 mm)
- ▶ 3" (80 mm)
- ▶ 4" (100 mm)
- ▶ 6" (150 mm)

TOTALPAC® N2 preaction system is supplied with groove/groove deluge valve. Unit with flange/flange deluge valve is also available on request.

6.1 Double interlock preaction system

The system piping network is pressurized with air or nitrogen gas. The preaction system uses the Viking deluge valve which opens when both the detection network activates and a loss of pressure in the system piping network occurs, or anytime the handle of the emergency release valve is pulled.

If the detection network activates due to fire or malfunction, the deluge valve will not open.

If the system piping network is broken or an automatic sprinkler fuses, the deluge valve will not open.

6.2 ECS® AG-950-FF nitrogen generator

Engineered Corrosion Solutions utilizes membrane technology in the **ECS**® AG-950-FF corrosion inhibiting systems in order to efficiently separate nitrogen molecules from the air we breathe. Membrane technology has a simple air flow design, and is easy to service.

The **ECS**® AG-950-FF system provide an economical, precise means of generating high purity nitrogen. Since air is comprised of ~79% N_2, we simply and cost-effectively separate the N_2 from the air. Nitrogen is an inert gas (non-combustible) and widely used in thousands of industries along with fire protection systems. The N_2 is “generated” by means of the air compressor pushing air into the simple, safe membrane element, which in turn mechanically separates N_2 molecules from other molecules found within air.

The **ECS**® AG-950-FF nitrogen generation system effectively inhibits electrochemical, galvanic and microbiologically influenced corrosion (MIC), as well as freeze-ups and ice plugs. The **ECS**® AG-950-FF corrosion inhibiting system produces 98% or higher pure nitrogen on demand and introduces it to the preaction piping network. In doing so, oxygen and moisture are displaced from the piping through the **ECS**® PSV-D SMART vent system.

6.3 ECS® PSV-D SMART vent

High purity Nitrogen must be equally distributed throughout the entire sprinkler piping system in order to effectively inhibit corrosion. The patented **ECS**® PSV-D SMART vent provides a low volume, constant purge of nitrogen within sprinkler piping. The rate in which gas is evacuated from the sprinkler piping is within NFPA guidelines and allows breathing to occur. The **ECS**® PSV-D SMART vent also assists in drying out the residual water from a hydrostatic test. Computational fluid dynamics modeling proves that this is the most effective way to ensure that high purity nitrogen reaches all branches within the sprinkler piping. The **ECS**® PSV-D SMART vent is installed within the ***TOTALPAC® N2*** cabinet.

6.4 ECS® Leak monitor alarm

Minor leaks cause the **ECS**® AG-950-FF air compressor to run in order to maintain supervisory pressure. The nitrogen generator and air compressor are designed to run up to two (2) hours at a time when filling the system to specified pressure of high purity nitrogen. If the **ECS**® AG-950-FF air compressor is running greater than four (4) hours, the ***TOTALPAC® N2*** system activates an audible alarm and transmit a supervisory signal to the monitoring alarm panel. Corrective procedures must be taken to resolve the leaks.

7- System release

7.1 Electric/pneumatic release

Preaction system with electric/pneumatic release requires an electric detection network equipped with compatible detectors. Release trim for the deluge valve requires a normally closed solenoid valve controlled by an approved releasing control panel (if provided with this system, see section **E** CONTROLS and VFR-500 manual for details). Release trim for the deluge valve also use a pneumatic actuator which is held closed by the pressure maintained in the system piping network. The detection network must activate, and the pressure must be released from the system piping network in order to open the deluge valve.

In fire condition, both the activation of a detector on the detection network and the fusing of an automatic sprinkler from the system piping network are required to energize the normally closed solenoid valve and to release the pneumatic actuator, causing the deluge valve to open. Water will flow from the preaction system through opened sprinklers. Automatic sprinkler must open to allow water to flow from the preaction system.

This page is left intentionally blank.

1- Installation, operation & maintenance instructions

Note: Numbers indicated between brackets refer to figure 4 DETAILED SYSTEM TRIM SCHEMATICS from this section and section **D** AIR SUPPLY.

1.1 Installation

1. Conform to local municipal or other codes regarding installations of fire protection systems.
2. Install the ***TOTALPAC® N2*** unit and connect the system according to instruction manual and technical data supplied.

IMPORTANT ! The cabinet must be firmly anchored to the floor using all four (4) anchoring holes (see section **G** CABINET).

Note: The drain collector shall be connected to an open drain. Do not restrict or reduce drain piping.

3. Install the system piping network in accordance with applicable standards.
4. Connect supervisory and alarm signals according to electrical schematics and if applicable, all detection and signaling circuits (see section **F** ELECTRICAL).
5. Connect the AC power to the **ECS®** AG-950-FF corrosion inhibiting system on its own breaker in the electric distribution panel. If applicable, connect the AC power to the release control panel on a separate breaker in the electric distribution panel (see section **F** ELECTRICAL).

Notes:
AC power connections must be made by a qualified installer according to national standards and equipment specifications.

Do not apply AC power to the equipment yet.

6. Perform preliminary inspection prior to put system in service (see paragraph 1.2 of the current section).
7. Place the system in service (see paragraph 1.3 of the current section).
8. Perform the annual inspection sequence (see paragraph 1.8 of the current section) and test each detection device and alarm unit.
9. If the system does not operate as it should, make the necessary corrections according to manuals issued or consult your distributor or *FIREFLEX* Systems Inc.
10. Make sure that building owner or a delegated representative has received instructions regarding the operation of the system.

WARNING ! ***TOTALPAC® N2*** unit must be installed in an area not subject to freezing temperatures or physical damage.

1.2 Preliminary inspection before placing the system in service

1. Open door to mechanical section.
   a) Main water supply valve *(D1)* must be CLOSED.
   b) Priming valve *(B1)* must be CLOSED.
   c) Air supply for system piping network must be CLOSED (see section **D** AIR SUPPLY).
   d) Flow test valve *(B6)* and main drain valve *(D3)* must be CLOSED.
   e) Alarm test valve *(B5)* must be CLOSED.
   f) Gauges *(B11, B12* and *E3)* should show 0 PSI (0 kPa).
   g) If applicable, the shut-off valve *(D4)* must be OPEN.
2. OPEN the manual emergency release valve *(B10)* and make sure the deluge valve *(A1)* is tripped.

WARNING ! Do not expose the **ECS®** PSV-D SMART vent assembly to hydrostatic test. CLOSE the PSV-D SMART vent isolation valve and the AG-950-FF isolation valve prior to hydrostatic test (see section **E** CONTROLS). OPEN the valves once test is completed and system is fully drained.

3. Using the built-in contractor's hydrostatic test ports (see figure 3 of this section and section **D** AIR SUPPLY), fill system piping network with water and maintain pressure as per NFPA-13 requirements.

WARNING ! Do not subject the pressure gauges and pressure transducers to hydrostatic pressure above 250 PSI (1724 kPA). CLOSE gauge valves before proceeding with hydrostatic test.

4. Correct leaks if any before completing test.
5. Verify that main water supply valve *(D1)* is still CLOSED.
6. OPEN main drain valve *(D3)* to completely drain the system piping network.
7. Apply AC power to the **ECS®** AG-950-FF system. If applicable, apply AC power to the release control panel. The air supply must be CLOSED (see section **D** AIR SUPPLY).
8. If applicable, connect the batteries to the release control panel. Observe battery size and polarity.

For battery capacity calculations, see the VIKING VFR-500 INSTALLATION, OPERATION AND INSTRUCTION MANUAL provided with the ***TOTALPAC® N2*** unit.

Note: Batteries shall be installed with the release control panel at hanged position. Battery compartment should always stay closed while rotating the release control panel.

9. If applicable, reset the release control panel and silence the alarms (see section **E** CONTROLS).

1.3 Placing the system in service

1. Verify that the main water supply valve *(D1)* is CLOSED. Verify that the system has been properly drained.
2. Verify that all automatic sprinklers are set and that inspector's test valves and/or piping auxiliary drain valves are CLOSED.
3. CLOSE main drain valve *(D3)*. Verify that the manual emergency release valve *(B10)* is CLOSED. OPEN PSV-D SMART vent isolation valve (see figure 8 of section **E** CONTROLS) and the AG-950-FF isolation valve (see figure 3 of this section).
4. Air supply must be OPEN (see section **D** AIR SUPPLY). FAST FILL must be enabled (see section **E** CONTROLS).
5. Establish recommended supervisory pressure to the system piping network (see paragraph 2.1 NORMAL CONDITION of the current section and section **D** AIR SUPPLY).
6. Disable FAST FILL and initiate venting process (see section **E** CONTROLS).
7. OPEN priming valve *(B1)*. Verify that the pressure indicated at the priming pressure gauge *(B11)* is equal to, or greater than the pressure indicated at the water supply pressure gauge *(B12)*.
8. If applicable, reset the release control panel (see section **E** CONTROLS). Solenoid valve *(F1)* should CLOSE.
9. OPEN flow test valve *(B6)*. PARTIALLY OPEN main water supply valve *(D1)*.
10. When full flow develops from the flow test valve *(B6)*, CLOSE the flow test valve. Verify there is no flow from drip check valve *(B7)* when the plunger is pushed.
11. FULLY OPEN the main water supply valve *(D1)*.
12. Verify that the alarm test valve *(B5)* is CLOSED and that all other valves are in their "normal" operating position (see paragraph 2.1 NORMAL CONDITION of the current section).
13. If applicable, reset the release control panel (see section **E** CONTROLS).
14. Check and repair all leaks.
15. On new installation, system that has been placed out of service, or where new equipment has been installed, trip test the system to verify that all equipment functions properly (see paragraph 1.7.2 FULL FLOW TRIP TEST of the current section).
16. Notify the AUTHORITY HAVING JURISDICTION, remote station alarm monitors, and those in the affected area that the system is in service.

Note: When a valve has been removed from service and is subject to freezing or will be out of service for an extended period of time, all water must be removed from the priming chamber, trim piping, water supply piping and any other trapped areas.

1.4 System Operation

1.4.1 In the SET condition

System water supply pressure enters the priming chamber of the deluge valve *(A1)* through the priming line which includes a normally open priming valve *(B1)*, strainer *(B2)*, restricted orifice *(B3)* and spring loaded check valve *(B4)*.

Water pressure is trapped in the priming chamber of the deluge valve *(A1)* by a spring loaded check valve *(B4)*, pneumatic actuator (*F3*), normally closed solenoid valve *(F1)*, PORV *(B9)* (pressure operated relief valve) and manual emergency release valve *(B10)*. The pressure in the priming chamber holds the deluge valve clapper closed, keeping the outlet chamber and system piping dry.

1.4.2 In a fire condition

When the detection condition is satisfied, the release control panel energizes the solenoid valve *(F1)*. Alarms activates but the deluge valve *(A1)* will not open. When an automatic sprinkler fuses, the low air pressure switch *(E4)* activates and the pneumatic actuator (*F3*) opens. Both conditions are required to open the deluge valve *(A1)*.

Pressure from the priming chamber of the deluge valve *(A1)* is released to the open drain manifold faster than it is supplied through the restricted orifice *(B3)*. The deluge valve clapper opens to allow water to flow into the piping network and alarm devices, causing water flow alarms connected to the alarm pressure switch *(C1)* and the optional water motor alarm *(C2)* to activate. When an automatic sprinkler fuses, water will flow from the system piping network.

When the deluge valve *(A1)* opens, the sensing end of the PORV *(B9)* is pressurized, causing it to open. It then continually vent the priming chamber, preventing the closure of the deluge valve. The deluge valve can only be reset after the system is taken out of service.

Note: If the detection system operates due to mechanical damage or malfunction, the deluge valve *(A1)* will stay closed.

1.4.3 Manual operation

Anytime the handle of the manual emergency release valve *(B10)* is triggered, pressure is released from the priming chamber of the deluge valve *(A1)* causing deluge valve to open. Water will flow into the system piping network and alarm devices *(C1* and optional *C2)* will operate. The PORV *(B9)* keeps the deluge valve open. When an automatic sprinkler fuses, water will flow from the system piping network.

1.4.4 Supervisory condition

If an automatic sprinkler opens prior the operation of the detection system or any time the supervisory pressure is lost in the system piping network, the low air pressure switch *(E4)* will give a low air supervisory signal, but the deluge valve *(A1)* will stay closed.

1.5 Emergency instructions

To take system out of service

WARNING ! Placing a control valve or detection system out of service may eliminate the fire protection capabilities of the system. Prior to proceeding, notify all local AUTHORITIES HAVING JURISDICTION. Consideration should be given to employ a fire patrol in the affected areas.

After a fire, verify that the fire is OUT and that placing the system out of service has been authorized by the appropriate local AUTHORITY HAVING JURISDICTION.

Sprinklers piping that have been subjected to a fire must be returned to service as soon as possible. The entire system must be inspected for damage, and repaired or replaced as necessary.

1. CLOSE main water supply valve *(D1)*.
2. OPEN main drain valve *(D3)*.
3. If applicable, silence audible devices (see section **E** CONTROLS).

Note: Electric alarms controlled by a pressure switch installed at the ¾"-NPT (20mm) connection *(C2)* for a non-interruptible alarm signal cannot be shut-off until the deluge valve *(A1)* is reset or taken out of service.

4. Air supply must be CLOSED (see section **D** AIR SUPPLY).
5. OPEN flow test valve *(B6)*.
6. CLOSE priming valve *(B1)*.
7. CLOSE PSV-D SMART vent isolation valve and the AG-950-FF isolation valve.
8. Replace any detector that have been damaged.
9. Replace any automatic sprinkler that have opened, been damaged or exposed to fire conditions.
10. Return the system to service as soon as possible (see paragraph 1.6 PLACING THE SYSTEM BACK IN SERVICE AFTER OPERATION of the current section).
11. Perform all recommended maintenance procedures (see paragraph 1.8 MAINTENANCE in the current section).

Note: When a system has been removed from service and is subject to freezing or will be out of service for an extended period of time, all water must be removed from the priming chamber, trim piping, water supply piping and any other trapped areas.

1.6 Placing the system back in service after operation

1. Verify that the system has been properly drained. Verify that all automatic sprinklers are set and/or inspector's test valve and system piping auxiliary drain valves are CLOSED.
2. Verify that the main water supply valve *(D1)* is CLOSED, and that the manual emergency release valve *(B10)* is CLOSED. CLOSE main drain valve *(D3)*. OPEN AG-950-FF isolation valve.
3. Air supply must be OPEN (see section **D** AIR SUPPLY). FAST FILL must be enabled (see section **E** CONTROLS).
4. Establish recommended supervisory pressure to the system piping network (see paragraph 2.1 NORMAL CONDITION of the current section and section **D** AIR SUPPLY).
5. Disable FAST FILL and initiate venting process (see section **E** CONTROLS).
6. OPEN priming valve *(B1)*. Verify that the pressure indicated at the priming pressure gauge *(B11)* is equal to, or greater than the pressure indicated at the water supply pressure gauge *(B12)*.
7. If applicable, reset the release control panel (see section **E** CONTROLS). Solenoid valve *(F1)* should CLOSE.
8. OPEN flow test valve *(B6)*. PARTIALLY OPEN main water supply valve *(D1)*.

Note: Do not open main water supply valve *(D1)* until gauge *(B11)* shows stabilized pressure.

9. When full flow develops from the flow test valve *(B6)*, CLOSE the flow test valve. Verify there is no flow from drip check valve *(B7)* when the plunger is pushed.
10. FULLY OPEN the main water supply valve *(D1)*.
11. Verify that the alarm test valve *(B5)* is CLOSED and that all other valves are in their "normal" operating position (see paragraph 2.1 NORMAL CONDITION of the current section).
12. If applicable, reset the release control panel (see section **E** CONTROLS).
13. Check and repair all leaks.
14. Notify the local AUTHORITY HAVING JURISDICTION, remote station alarm monitors, and those in the affected area that the system is back in service.

1.7 Inspections and tests

NOTICE: The owner is responsible for maintaining the fire protection system and devices in proper operating condition.

It is imperative that the system be inspected and tested on a regular basis in accordance with NFPA-25. Refer to Inspections and Tests recommended in Viking technical data describing individual components of the preaction system used.

The frequency of the inspections may vary due to contaminated or corrosive water supply, corrosive atmospheres, as well as the condition of the air supply to the system. For minimum maintenance and inspection requirements, refer to NFPA-25. In addition, the AUTHORITY HAVING JURISDICTION may have additional maintenance, testing, and inspection requirements that must be followed.

WARNING ! Any system maintenance that involves placing a control valve or detection system out of service may eliminate the fire protection capabilities of that system.

Prior to proceeding any testing, notify all local AUTHORITIES HAVING JURISDICTION. Consideration should be given to employment of a fire patrol in the affected areas.

1.7.1 System piping network low air supervisory test

1. To prevent operation of the deluge valve *(A1)* and filling of the piping network with water during the test, CLOSE main water supply valve (*D1*) and OPEN flow test valve *(B6)*.
2. If applicable, verify that the shut-off valve *(D4)* is OPEN.
3. FULLY OPEN the inspector's test valve on the system piping network, or the main drain valve *(D3)*.
4. Verify that low air supervisory signal operates within acceptable time period and continue without interruption.
5. CLOSE the inspector's test valve, or the main drain valve *(D3)*.
6. Establish recommended supervisory pressure to the system piping network (see section **D** AIR SUPPLY).
7. OPEN priming valve *(B1)*. Verify that the pressure indicated at the priming pressure gauge *(B11)* is equal to, or greater than the pressure indicated at the water supply pressure gauge *(B12)*.
8. PARTIALLY OPEN main water supply valve *(D1)*.
9. When full flow develops from the flow test valve *(B6)*, CLOSE the flow test valve. Verify there is no flow from drip check valve *(B7)* when the plunger is pushed.
10. FULLY OPEN the main water supply valve *(D1)*.
11. If applicable, reset the release control panel (see section **E** CONTROLS).

1.7.2 Full flow trip test

Performance of a full flow trip test is recommended annually during warm weather. Consider coordinating this test with operation testing of the releasing devices.

Caution ! Performance of this test will cause the deluge valve *(A1)* to open and the system piping network to be filled with water. If it is not required to fill the system piping network with water, use the shut-off valve (if applicable) (see paragraph 1.7.4 OPERATION OF THE SHUT-OFF VALVE of the current section).

To trip test the electric/pneumatic release system

1. Trip the deluge valve *(A1)* by performing the following paragraph “a” or “b”.
   a) Open the inspector's test valve from the system piping network. Activate a detector according to the manufacturer's instructions.
   b) Open the door of the manual emergency release valve *(B10)* and trigger the handle.
2. The deluge valve *(A1)* should open. Alarm devices *(C1* and optional *C2)* should operate. The piping network will be filled with water.
3. OPEN the inspector's test valve from the system piping network to verify adequate flow.

When trip testing is complete

1. Perform steps 1 through 6 of paragraph 1.5 EMERGENCY INSTRUCTIONS to take the system out of service.
2. Perform steps of paragraph 1.6 PLACING THE SYSTEM BACK IN SERVICE AFTER OPERATION.

1.7.3 Main drain test

A main drain test shall be conducted to determine whether there has been a change in the condition of the water supply piping and control valves.

Test procedure

1. Record the pressure indicated by the water supply gauge *(B12)*.
2. If applicable, CLOSE the alarm control valve.
3. FULLY OPEN the flow test valve *(B6)*.
4. Record residual pressure.
5. CLOSE the flow test valve *(B6)* slowly.
6. Record the time taken for supply water pressure to return to the original pressure.
7. Compare results from previous inspections or initial commissioning. Any important variation from those results must be investigated.

Note: A main drain test shall be conducted any time the main water supply valve *(D1)* is closed and reopened at the system.

1.7.4 Operation of the optional shut-off valve

Inspection of the system can be implemented without filling the system piping network with water. The shut-off valve *(D4)* and sight glass assembly *(D5)* allows to verify the operation of the system and prevents water from reaching the piping network.

1. CLOSE the shut-off valve *(D4)* to isolate the system piping network.
2. Execute the full flow trip test (see paragraph 1.7.2 of the current section). The deluge valve *(A1)* should open.
3. Using a flashlight in one of the sight glasses, verify that water flows through the sight glass assembly *(D5)*.

When trip testing is complete

1. Perform steps 1 through 6 of paragraph 1.5 EMERGENCY INSTRUCTIONS to take the system out of service.
2. Perform steps of paragraph 1.6 PLACING THE SYSTEM BACK IN SERVICE AFTER OPERATION.

1.8 Maintenance

NOTICE: The owner is responsible for maintaining the fire protection system and devices in proper operating condition.

The system shall be maintained in full operation condition at all times.

All troubles or impairments shall be corrected promptly consistent with the hazard being protected.

Refer to MAINTENANCE INSTRUCTIONS provided in Viking Technical Data describing individual components of the system used.

The air supply shall be maintained in full operating condition at all times (refer to section **D** AIR SUPPLY).

The following requirements are based upon NFPA-25.

Records

Records of inspections, tests and maintenance of the system and its components shall be made available to the AUTHORITY HAVING JURISDICTION upon request. Typical records include, but are not limited to: valves inspection; flow, drain, and pump tests, and trip test of the deluge valves.

Acceptance test records should be retained for the life of the system or its special components. Subsequent test records should be retained for a period of one (1) year after the next test. The comparison determines deterioration of system performance or condition and the need for further testing or maintenance.

1.8.1 Monthly

1. Inspection of gauges (water supply *(B12)* and priming chamber *(B11)* pressure) to ensure good condition and normal water supply pressure.
2. Control valve shall be externally inspected. The valve inspection shall verify the following:
   a) The gauges indicate that normal supply water pressure is being maintained.
   b) The valve is free of physical damage.
   c) All valves are in the appropriate open or closed position (see paragraph 2.1 of the current section).
   d) There is no leakage from the alarm drains.

1.8.2 Quarterly

1. Check alarm pressure switch *(C1)* and optional water motor gong *(C2)* by opening the alarm test valve *(B5)*.
2. Conduct system piping network low air supervisory test (see paragraph 1.7.1 of the current section).

1.8.3 Semi-annually

1. Main water supply valve *(D1)* switch shall be operated to verify the switch actuation upon movement of the hand wheel.
2. Check alarm pressure switch *(C1)* and optional water motor gong *(C2)* by opening the alarm test valve *(B5)*.
3. Perform functional test of all components of the system.

1.8.4 Annually

1. Perform full flow trip test (see paragraph 1.7.2 of the current section).
2. Record indicating the date of the last trip, tripping time and name of the organization conducting the test shall be maintained at a location available for review by the AUTHORITY HAVING JURISDICTION.
3. Perform main drain test (see paragraph 1.7.3 of the current section).

1.8.5 Every 5 years

1. Test on gauge (gauge precision required: less than 3% of the full scale).
2. Perform test on control valve operation.
3. Deluge valve *(A1)* and their associated strainers, filters and restriction orifices shall be inspected internally.
4. Perform main drain test (see paragraph 1.7.3 of the current section).

2- Double interlock preaction system with electric/pneumatic release and corrosion inhibiting system

Note: Numbers indicated between brackets refer to figure 4 DETAILED SYSTEM TRIM SCHEMATICS from this section and section **D** AIR SUPPLY.

2.1 Normal condition

1. Displays
   a) Green lamp of the release controls panel of the ***TOTALPAC® N2*** system (if applicable) identified AC POWER lights up. All other lamps are off.
   b) Green lamp for disable switch lights up.
   c) Green lamp of the **ECS®** AG-950-FF system identified POWER lights up (see section **E** CONTROLS).
   d) HMI display screen of the **ECS®** AG-950-FF system is on the Home screen. Home screen displays nitrogen supply line pressure, nitrogen generator cut-in and cut-out pressures, nitrogen generator status, nitrogen generator running hours and cycles.
2. Valves
   a) Main water supply valve *(D1)* is OPEN.
   b) All upstream water supply valves are OPEN.
   c) Priming valve *(B1)* is OPEN.
   d) Flow test valve *(B6)* is CLOSED.
   e) Main drain valve *(D3)* is CLOSED.
   f) Alarm test valve *(B5)* is CLOSED.
   g) Manual emergency release valve *(B10)* is CLOSED (handle in vertical position).
   h) Air supply is OPEN (see section **D** AIR SUPPLY).
   i) All gauge valves are OPEN.
   j) Shut-off valve *(D4)* is OPEN (if applicable).
   k) **ECS®** AG-950-FF unit flow level valve is CLOSED (see section **E** CONTROLS).
   l) **ECS®** PSV-D SMART vent isolation valve is OPEN (see section **E** CONTROLS).
   m) **ECS®** PSV-D SMART vent strainer valve is CLOSED (see section **E** CONTROLS).
   n) **ECS®** AG-950-FF isolation valve on supply line is OPEN.
3. Gauges
   a) Water supply pressure *(B12)* shall not exceed 175 PSI (1207 kPa) or 250 PSI (1724 kPa).
   b) Priming chamber pressure *(B11)* should be equal to, or higher than, water supply pressure *(B12)*.
4. Pressure switches & settings (factory set)
   a) Alarm pressure switch *(C1)* should activate when pressurized higher than 5 PSI (34 kPa).
   b) Low air pressure switch *(E4)* should activate when pressurized lower than 25 PSI (172 kPa) or 45 PSI (310 kPa) (see section **D** AIR SUPPLY).
   c) Refer to section **D** AIR SUPPLY for air pressure settings.

Figure 1 - *TOTALPAC® N2* (shown without doors) - Self-contained configuration

See figures 3 and 4 for additional details.

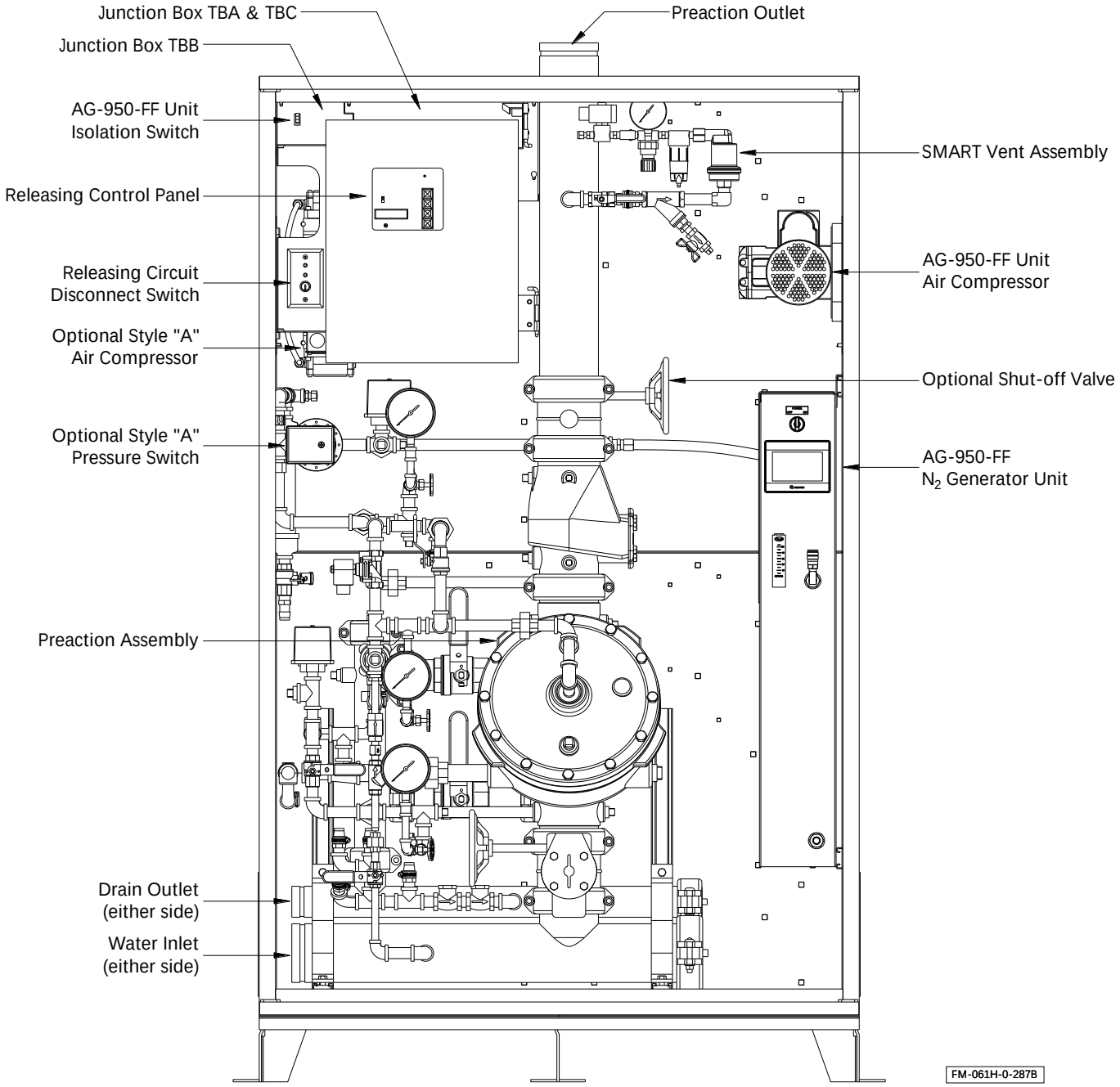

Figure 2 - *TOTALPAC® N_2* (shown without doors) - Remotely controlled configuration

See figures 3 and 4 for additional details.

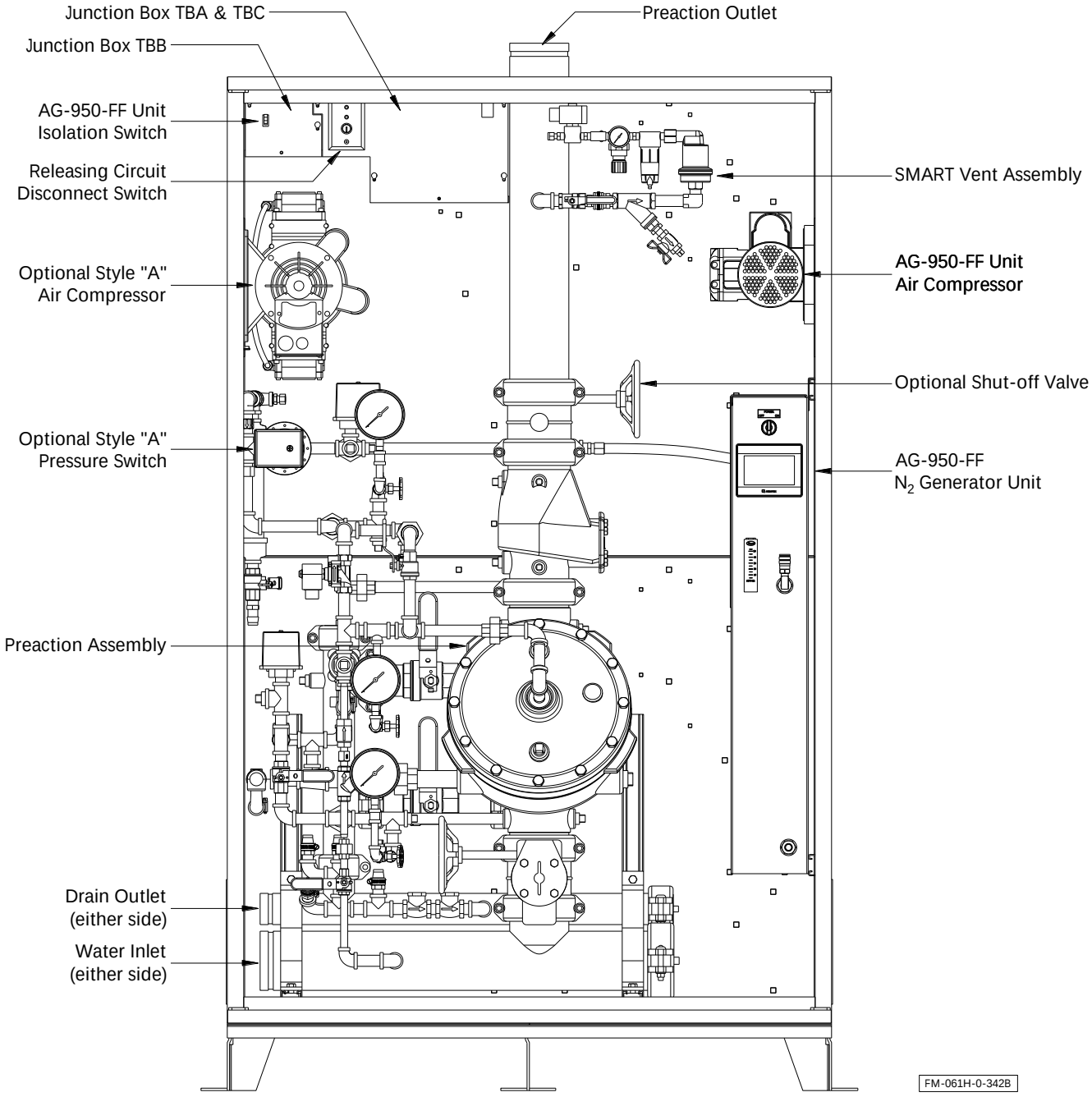

Figure 3 - *TOTALPAC® N_2* P & ID

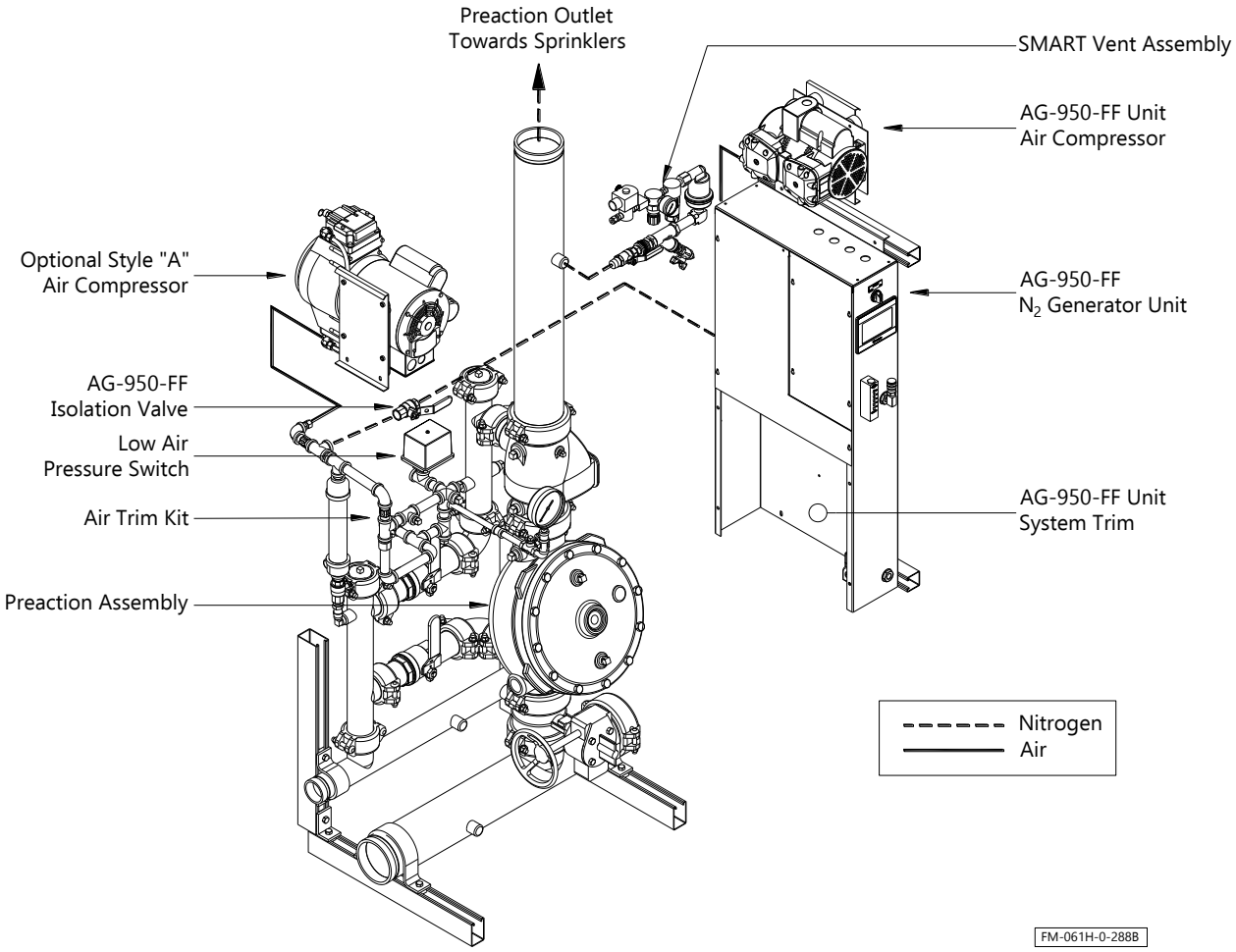

Figure 4 - Detailed system trim schematic

Typical double interlock preaction system with electric/pneumatic release (3" (80 mm) system shown)

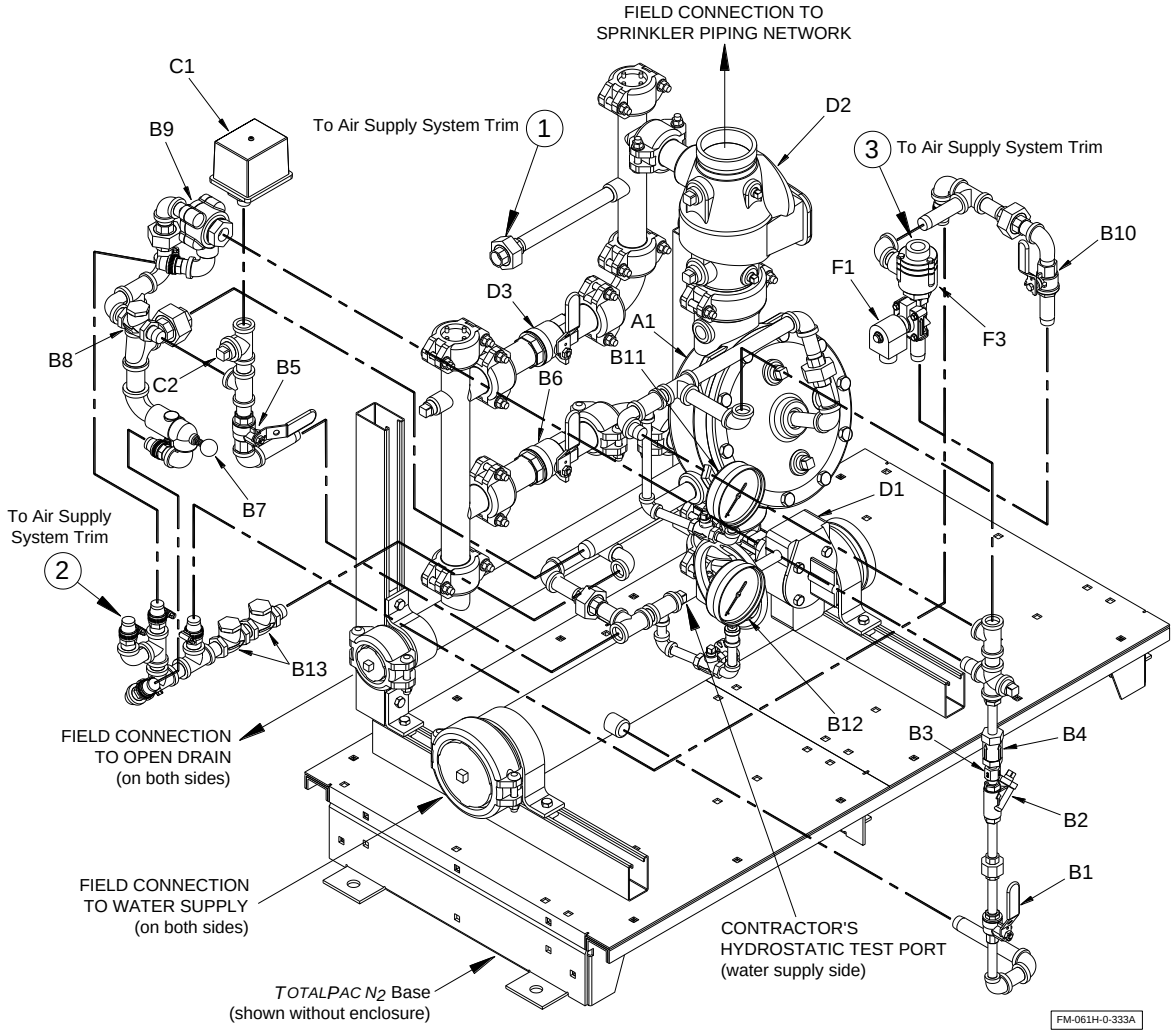

Trim components

A1 Deluge valve

B1 Priming valve (N.O.)
B2 Strainer
B3 1/16" (1.6 mm) Restricted orifice
B4 Spring loaded check valve
B5 Alarm test valve (N.C.)
B6 Flow test valve (N.C.)
B7 Drip check valve (N.O.)
B8 Drain check valve
B9 PORV (pressure operated relief valve)
B10 Manual emergency release valve (N.C.) (shown in closed position)
B11 Priming pressure water gauge & valve (N.O.)
B12 Water supply pressure gauge & valve (N.O.)
B13 Clapper check valve

C1 Alarm pressure switch (PS10-1)
C2 ¾"-NPT (20 mm) connection to optional water motor gong (strainer to be supplied by contractor)

D1 Main water supply valve (N.O.)
D2 Riser check valve
D3 Main drain valve (N.C.)

F1 24VDC solenoid valve (N.C.)
F3 Pneumatic actuator

Preaction trim options

1. Shut-off valve & sight glass

The shut-off valve & sight glass option is intended to be used for applications where testing of the system operation without filling the sprinkler piping network is desirable and where it is critical that all functions of the preaction system be tested under actual discharge conditions. Examples of such applications are freezers, ovens, museums, data processing and other hazards where the possibility of water leaking from the piping system is to be avoided at all costs.

Operation of the shut-off valve

Inspection of the system can be implemented without filling the sprinkler piping network with water.

1. CLOSE the sprinkler piping network shut-off valve *(D4)*; the valve is supervised on the same circuit as the main water supply valve *(D1)*.
2. OPEN the main drain valve *(D3)*.
3. Simulate the operation of the system to open the deluge valve *(A1)*; see annual test under section **B** INSPECTION AND MAINTENANCE. Using a flashlight in the sight glasses, verify that water flows through the sight glass assembly *(D5)*.
4. Once tests are completed, make sure the main drain valve *(D3)* is completely CLOSED. Return the system in service as per section **B** PLACING THE SYSTEM BACK IN SERVICE.
5. Fully OPEN the shut-off valve *(D4)*. Reset the release control panel as per section **E** CONTROL BUTTONS.

Figure 1 – Shut-off valve & sight glass
(system is shown without cabinet for clarity)

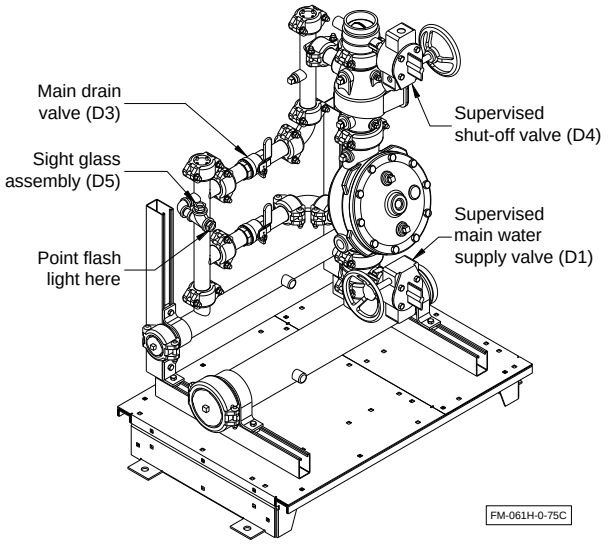

2. Semi-flanged option

When required by the user, ***TOTALPAC® N2*** unit can be provided in semi-flanged configuration.

The semi flanged option provides flanged fittings only on the water inlet pipe (side needs to be specified at the time of order) and on the system riser outlet. The drain manifold is then provided with a threaded end that also needs to have its side specified (left or right). The rest of the fittings are the same as usual with the main components being provided in the standard flanged/ grooved configuration.

Figure 2 – Semi-flanged unit typical detail
(system is shown without cabinet for clarity)

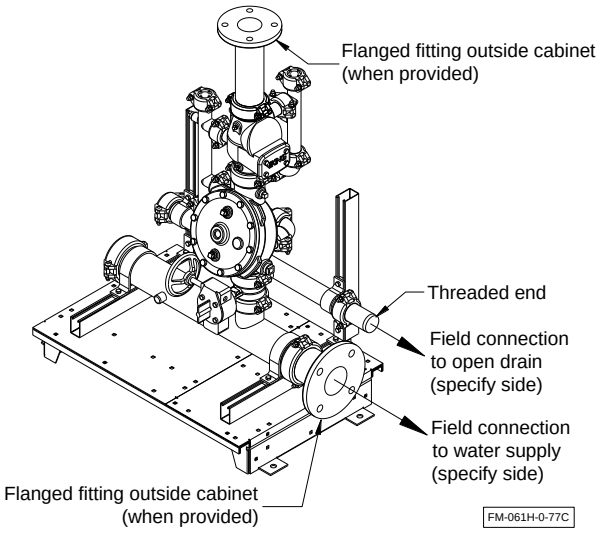

3. Anti-column device option

The model LD-1 anti-column device is an optional trim component designed for use with preaction sprinkler system. The anti-column device automatically prevents an unwanted water column from establishing within the system riser. On preaction sprinkler systems, the anti-column device prevents water from columning downstream of the easy riser check valve.

Figure 3 – Anti column device

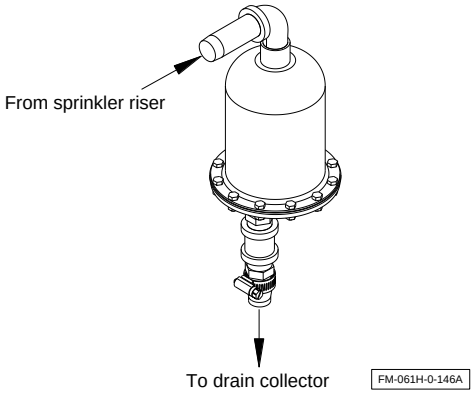

4. ECS® Nitrogen Purity Sensor

The **ECS**® Nitrogen Purity Sensor provides a continuous real-time monitoring of nitrogen/oxygen concentration levels within a preaction fire protection system.

Refer to **ECS**® AG-950-FF Installation & Operation Manual for operating instructions.

5. ECS® in-line corrosion detector

The **ECS**® in-line corrosion detector is designed to provide an early warning indication of internal corrosion activity in water-based fire protection systems. The device is designed to be installed outside the cabinet, where corrosion is most likely to occur: the air/water interface. A cross-section of the device shows the two key attributes that allow for early detection of corrosion: an externally milled section of the pipe that creates a “thin wall” section and a pressure chamber created by an external sleeve welded over the pipe. The thin wall section of the device will fail before other system piping to provide an early warning indication.

The **ECS**® in-line corrosion detector is equipped with a pressure switch to monitor the pressure chamber and can be remotely monitored through the low air pressure circuit of the ***TOTALPAC® N2*** control panel or locally through the **ECS**® detector remote test station.

Refer to **ECS**® AG-950-FF Installation & Operation Manual for installation instructions.

Figure 4 – ECS® in-line corrosion detector

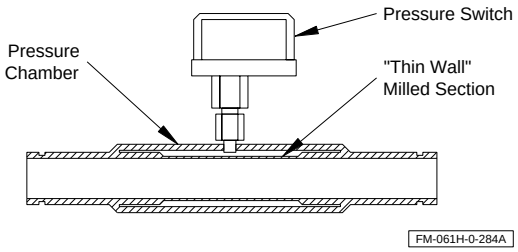

1. Cabinet Air Supplies

Preaction sprinkler system using air pressure for supervisory or releasing purposes is provided with either internal or external supervised air supply.

WARNING ! Pressures other than the factory pressure settings may affect the operation of the system.

Two (2) styles of air supplies are available for the ***TOTALPAC® N2*** unit depending on needs or configurations. These air supplies are all factory assembled, mounted in the cabinet and pressure tested. Following is the description of those options.

1.1 Air supply Style "D1" (refer to figure 2)

Primarily used for initial system piping network filling with volume less than 250 gallons. For higher volume, external air supply is required. Air supply style "D1" only provides an air pressure supervisory.

Also used with preaction system protecting refrigerated spaces and freezers, where a special dry external air supply unit is piped directly to the system riser inside the freezer itself, as shown in NFPA-13.

Ambient temperature at the special external air supply unit location should not exceed 104°F (40°C). Refer to NFPA and Factory Mutual Codes & Standards for details on refrigerated spaces applications. Air supply style "D1" can also be used when the contractor prefers to provide his own air supply & regulation trim, mounted outside the ***TOTALPAC® N2*** cabinet.

WARNING ! When external air supply style "D1" is required, the air supply should be provided and installed by the sprinkler contractor OUTSIDE the ***TOTALPAC® N2*** cabinet. Air supply is NOT provided with the unit.

1.2 Air supply Style "A" (refer to figure 3)

Used for initial system piping network filling with volume over 250 gallons or, except for electric release system, any system with water supply pressure higher than 175 PSI (1207 kPa). Air supply style "A" includes the air compressor mounted inside the ***TOTALPAC® N2*** cabinet with its supervisory trim and options. Air compressor is of the oilless piston type without reservoir and is factory piped to the sprinkler piping system riser, all within the ***TOTALPAC® N2*** cabinet.

A factory wired isolation switch (see figure 2 in section **E** CONTROLS) is also provided in the ***TOTALPAC® N2*** cabinet, allowing powering off the air compressor while some maintenance work on the unit is done, without disturbing the rest of the system.

To connect non-energized AC power to the air compressor, refer to field wiring diagram (see section **F** ELECTRICAL).

Table 1 - Air compressor F.L.A. (full load amp) rating

Air compressor size	115Vac 60Hz
1/2 HP	10.0 Amp
1 HP	18.0 Amp
1.5 HP *	16.6 Amp

Air compressor size	220Vac 50Hz	240Vac 50Hz
0.56 KW	4.0 Amp	4.5 Amp
1.2 KW	6.0 Amp	6.0 Amp
1.5 KW *	6.3 Amp	6.0 Amp

* Air compressor is available with remote system only.

Note : Selection of the appropriate wire size is the responsibility of the installing contractor.

2. Operation

2.1 Air supply Style "D1" with external air supply (refer to figure 2)

To apply initial air pressure

1. Verify that the **ECS**® AG-950-FF unit POWER switch is in the OFF position (see section **E** CONTROLS).
2. Turn on upstream air supply.
3. OPEN external air shut-off valve (supplied by contractor).

To maintain air supply

1. Once the piping network pressure is reached, CLOSE external air shut-off valve (supplied by contractor).
2. Turn the **ECS**® AG-950-FF unit POWER switch to ON position (see section **E** CONTROLS). The corresponding green lamp will illuminate. Ensure that FAST FILL is disabled (see section **E** CONTROLS).
3. Verify that isolation valve of the **ECS**® PSV-D SMART vent assembly is OPEN (see section **E** CONTROLS).
4. Press the START VENTING button in the VENT menu of the HMI display screen of the **ECS**® AG-950-FF unit. The **ECS**® PSV-D SMART purge system will operate for 14 days.

WARNING ! If FAST FILL is enabled for more than 1 hour, an audible sounder is activated from the **ECS**® AG-950-FF unit, and a supervisory condition is given on the VFR500 control panel if applicable.

To close air supplies

1. CLOSE external air shut-off valve (supplied by contractor).
2. Turn the **ECS**® AG-950-FF unit POWER selector switch to OFF position (see section **E** CONTROLS).

To adjust ECS® AG-950-FF unit system air pressure

Refer to table 4 and 5 for pressure settings.

Refer to section **ECS**® AG-950-FF pressure monitoring controller (see section **E** CONTROLS).

To adjust external air pressure

Refer to table 2 and 3 for pressure settings.

2.2 Air supply Style "A" or "D1" without external air supply (refer to figure 2 or figure 3)

To apply initial air pressure

1. Apply AC power to the **ECS**® AG-950-FF unit by activating the isolating switch *(E15)* located on the junction box of the unit (see section **E** CONTROLS).
2. Turn the POWER switch of the **ECS**® AG-950-FF unit to ON position (see section **E** CONTROLS). The corresponding green lamp will illuminate and the air compressor of the **ECS**® AG-950-FF unit will come on after a short delay.

Note: If the air compressor motor fails to start or slows down under load, shut the air compressor off. Check that the supply voltage matches the voltage indicated on the Wiring Diagram sticker in the cabinet door.

3. Press the ENABLE FAST FILL on the Home screen of the HMI display screen of the **ECS**® AG-950-FF unit. If the ***TOTALPAC® N2*** cabinet is equipped with air supply Style "A", the auxiliary air compressor will start; the **ECS**® AG-950-FF air compressor will turn OFF. The VENT function of the **ECS**® AG-950-FF unit is disabled while the FAST FILL is enabled.

Note: The system will not generate nitrogen while the FAST FILL function is enabled.

4. When the nominal air pressure is reached, the air compressor will stop. Press the DISABLE FAST FILL button on the Home screen of the HMI. Nitrogen mode function is enabled.

To generate initial nitrogen supply in piping network

1. OPEN the isolation valve at the ECS ® PSV DSMART vent assembly (see section **E** CONTROLS). Ensure that the isolation valve of the **ECS**® AG-950-FF is open.

Note: In the event of system power loss, all programmed information in the nitrogen generator is stored in the nitrogen generator and the nitrogen generator automatically return to the sequence prior to the loss of power.

2. Press the START VENTING button on the Venting Settings screen on the HMI of the **ECS**® AG-950-FF unit (see section **E** CONTROLS). The **ECS**® PSV-D SMART purge system will operate for 14 days. The FAST FILL button of the **ECS**® AG-950-FF unit is disabled while the VENT function is running.

Note: The isolation valve of the **ECS**® PSV-D SMART shall be kept OPEN unless maintenance is necessary.

To close ECS® AG-950-FF air supply

Turn the POWER switch of the **ECS**® AG-950-FF unit to OFF position (see section **E** CONTROLS) and close the isolation valve of the **ECS**® AG-950-FF.

To completely isolate the **ECS**® AG-950-FF unit, turn OFF the isolating switch *(E15)* located on the junction box of the unit (see section **E** CONTROLS).

To adjust ECS® AG-950-FF air supply

Refer to table 4 and 5 for pressure settings.

Refer to **ECS**® AG-950-FF nitrogen generation control unit in section **E** CONTROLS.

To adjust initial air pressure (Style "A" only)

Refer to table 2 and 3 for air pressure settings.

The cut-in and cut-out pressures are factory set. To adjust these pressures, refer to **ECS**® AG-950-FF nitrogen generation control unit in section **E** CONTROLS.

WARNING ! Any unauthorized modification to pressure settings will void the system warranty and may also prevent the system from operating normally.

WARNING ! Any adjustments of the air supply settings, low air switch and PSV-D SMART vent settings should be verified by the appropriate authority. Any deviations from the pressure settings indicated in table 2 to table 5 of this section may affect operation of the system and nitrogen generator efficiency.

3. Maintenance and inspection

Important : Advise local authorities of the necessary work over the fire protection equipment. In order to avoid accidental water release, it is considered good practice to completely close the main water supply valve *(D1)* while doing maintenance work.

3.1 Air supply Style "D1" (refer to figure 2)

The air or nitrogen supply provided must be continuous, clean, dry and oil free.

Determine the appropriate pressure to be maintained in the system. Refer to table 2 and 3 of the current section. If adjustment is necessary, refer to paragraph 2.1 of the current section.

3.2 Air supply Style "A" (refer to figure 3)

The Style "A" air accumulator should be drained once a year. The amount of moisture pumped into the system and how quickly it accumulates is proportional to the amount of humidity in the air and how long the compressor is in operation.

To drain the air supply accumulator

At least once a year, OPEN air option drain valve *(E12)* until all condensate water is drained from the air receiver. CLOSE air option drain valve.

Safety valve pressure

A safety relief valve is provided on standard compressor and is preset at the factory. Do not adjust or exceed safety relief pressure other than those preset at the factory.

WARNING ! The relief valve and outlet pipe of the air compressor may become very hot during normal operation. Do not touch the valve, compressor heads or outlet piping until the compressor has been turned off and allowed to cool.

WARNING ! Do not unscrew relief valve head entirely off while the compressor is operating. Ejection of valve parts could cause severe injury.

3.3 ECS® AG-950-FF unit maintenance

Quarterly

1. Verify for smooth operation of all valves.
2. Verify that all valves fully open and close.
3. Verify that air compressor is turning on/off at low/high pressure.
4. Verify the nitrogen purity level out of **ECS®** AG-950-FF sampling port (refer to **ECS®** AG-950-FF Installation and Operation Manual).
5. Verify the membrane nitrogen flow through output flow gauge (refer to **ECS®** AG-950-FF Installation and Operation Manual).
6. Verify that all gauges are in working order.
7. Verify there is no noticeable leak on the unit.

Semi-annually

1. Check semi-annually the coalescing filters.
2. Check semi-annually the compressor filter.

Every five years

Every five years, check the flexible hoses for worn or degrade. Replace as necessary.

Nitrogen generation filters

When maintained properly, the nitrogen separation membrane will have an expected service life of 20 years.

The **ECS®** AG-950-FF unit contains three (3) separate cartridge filters. It is recommended that each filter be replaced at a minimum as part of an annual preventative maintenance program.

Differential pressure indicators are included on the center and left filter housings to provide a visual indication when the cartridge filters are dirty and need replacement. The filter housings have a Green area on the top of the housing to indicate acceptable flow through the filter housing.

Indicator with green area showing means that flow through the generator filters is acceptable.

Indicator with green area NOT displayed - cartridge filters are dirty and need to be replaced.

Refer to **ECS®** AG-950-FF Installation and Operation Manual for cartridge filter ordering and replacement.

ECS® PSV-D SMART vent maintenance

While the isolation valve is in closed position, verify the condition of the in-line filter and for blockage in the "Y" strainer and restricted orifice. Depressurize the in-line filter housing by pressing on the pressure relief valve on the bottom of the housing. Twist the filter housing clockwise until it can be removed to expose the filter element.

Table 2 - System pressure settings for water pressure up to 175 PSI (1207 kPa)

System type	Air supply Style	Compressor start (Style A)	Compressor stop (Style A)	External air supply	Low air supervisory	Very low air supervisory
Non interlock Pneumatic release	A	30 PSI (207 kPa)	40 PSI (276 kPa)	n/a	25 PSI (172 kPa)	n/a
	D1	n/a	n/a	35 PSI (241 kPa)	25 PSI (172 kPa)	n/a
Non interlock Electric release	A	30 PSI (207 kPa)	40 PSI (276 kPa)	n/a	25 PSI (172 kPa)	23 PSI (NYC)
	D1	n/a	n/a	35 PSI (241 kPa)	25 PSI (172 kPa)	23 PSI (NYC)
Single interlock Electric release	A	20 PSI (138 kPa)	30 PSI (207 kPa)	n/a	15 PSI (103 kPa)	13 PSI (NYC)
	D1	n/a	n/a	25 PSI (172 kPa)	15 PSI (103 kPa)	13 PSI (NYC)
Double interlock Electric/pneumatic release	A	30 PSI (207 kPa)	40 PSI (276 kPa)	n/a	25 PSI (172 kPa)	23 PSI (NYC)
	D1	n/a	n/a	35 PSI (241 kPa)	25 PSI (172 kPa)	23 PSI (NYC)

Table 3 - System pressure settings for water pressure from 175 PSI to 250 PSI (1207 kPa to 1724 kPa)

System type	Air supply Style	Compressor start (Style A)	Compressor stop (Style A)	External air supply	Low air supervisory	Very low air supervisory
Non interlock Pneumatic release	A	50 PSI (345 kPa)	60 PSI (414 kPa)	n/a	45 PSI (310 kPa)	n/a
	D1	n/a	n/a	55 PSI (379 kPa)	45 PSI (311 kPa)	n/a
Non interlock Electric release	A	50 PSI (345 kPa)	60 PSI (414 kPa)	n/a	45 PSI (310 kPa)	43 PSI (NYC)
	D1	n/a	n/a	55 PSI (379 kPa)	45 PSI (311 kPa)	43 PSI (NYC)
Single interlock Electric release	A	20 PSI (138 kPa)	30 PSI (207 kPa)	n/a	15 PSI (103 kPa)	13 PSI (NYC)
	D1	n/a	n/a	25 PSI (172 kPa)	15 PSI (103 kPa)	123 PSI (NYC)
Double interlock Electric/pneumatic release	A	50 PSI (345 kPa)	60 PSI (414 kPa)	n/a	45 PSI (310 kPa)	43 PSI (NYC)
	D1	n/a	n/a	55 PSI (379 kPa)	45 PSI (311 kPa)	43 PSI (NYC)

Table 4 - ECS® AG-950-FF unit pressure settings for water pressure up to 175 PSI (1207 kPa)

System type	Compressor cut-in	Compressor cut-out	ECS® PSV-D SMART vent backpressure
Non interlock Pneumatic release	30 PSI (207 kPa)	35 PSI (241 kPa)	28 PSI (193 kPa)
Non interlock Electric release	30 PSI (207 kPa)	35 PSI (241 kPa)	28 PSI (193 kPa)
Single interlock Electric release	20 PSI (138 kPa)	25 PSI (172 kPa)	18 PSI (124 kPa)
Double interlock Electric/pneumatic release	30 PSI (207 kPa)	35 PSI (241 kPa)	28 PSI (193 kPa)

Table 5 - ECS® AG-950-FF unit pressure settings for water pressure from 175 PSI to 250 PSI (1207 kPa to 1724 kPa)

System type	Compressor cut-in	Compressor cut-out	ECS® PSV-D SMART vent backpressure
Non interlock Pneumatic release	50 PSI (345 kPa)	55 PSI (379 kPa)	48 PSI (331 kPa)
Non interlock Electric release	50 PSI (345 kPa)	55 PSI (379 kPa)	48 PSI (331 kPa)
Single interlock Electric release	20 PSI (138 kPa)	25 PSI (172 kPa)	18 PSI (124 kPa)
Double interlock Electric/pneumatic release	50 PSI (345 kPa)	55 PSI (379 kPa)	48 PSI (331 kPa)

Figure 2 - Air supply Style "D1"

For initial system piping network filling with volume less than 250 gallons (946 liters) or volume higher than 250 gallons with external air supply.

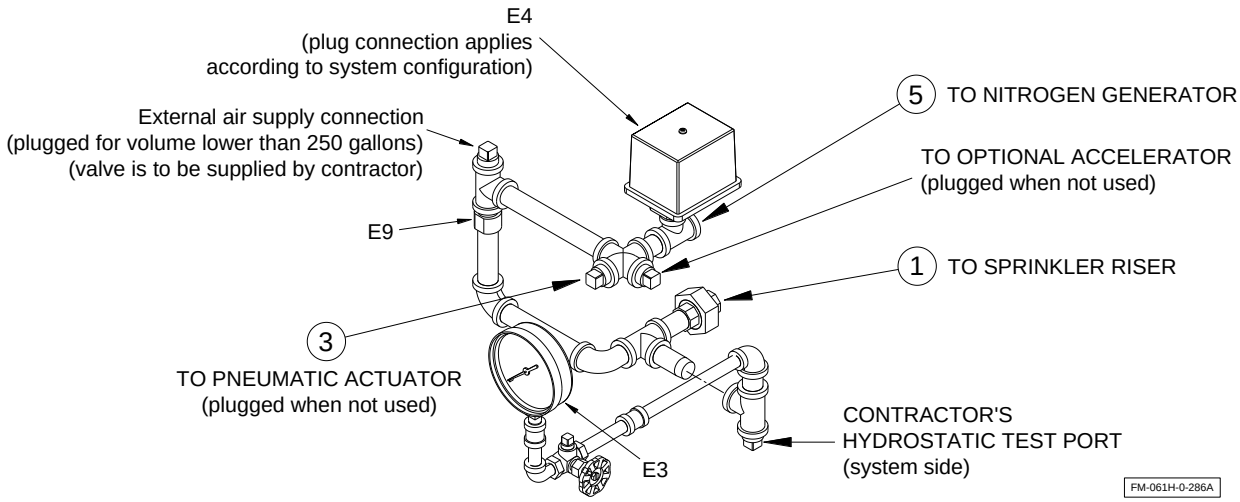

Note: Refer to table 2 and 3 for pressure settings.

Air style components

E3 System air pressure gauge & valve (N.O.)

E4 Air pressure supervisory switch (PS40-1) (PS-40-2 for NYC)

E9 Float check valve

Figure 3 - Air supply Style "A"

For initial system piping network filling with volume higher than 250 gallons (946 liters).

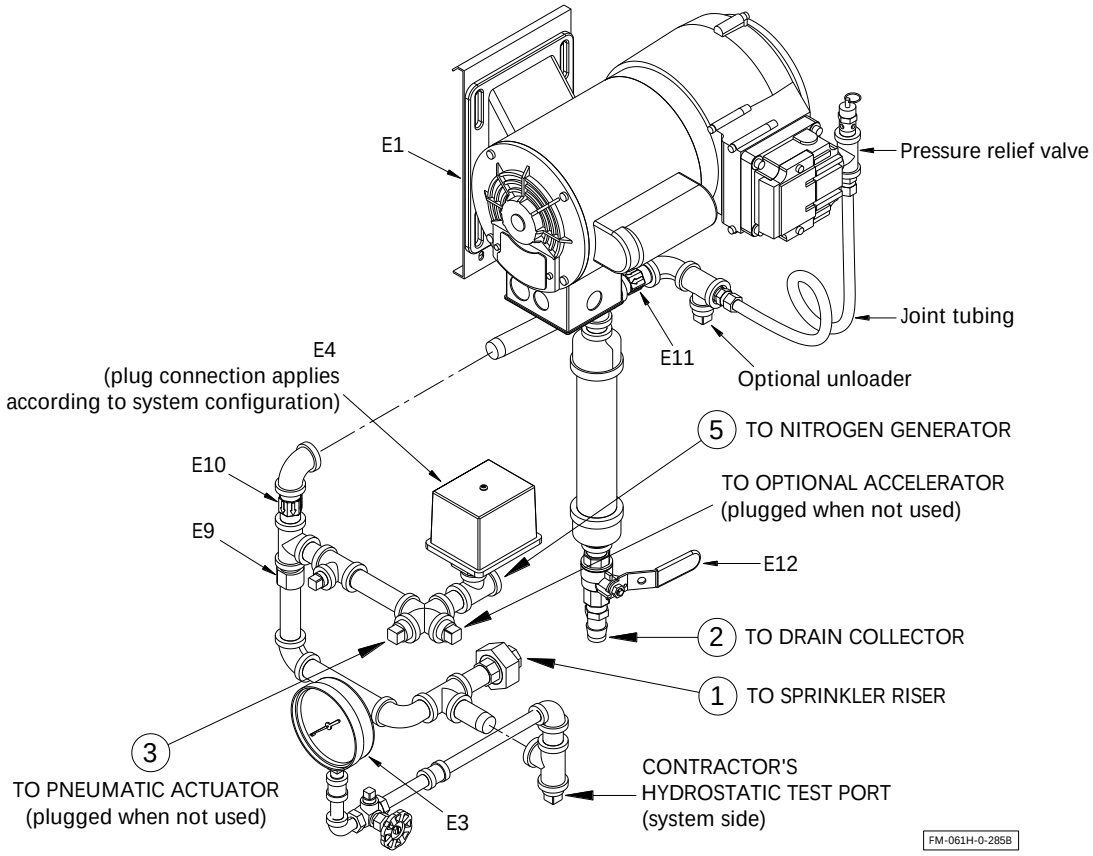

Note: Refer to table 2 and 3 for pressure settings.

Air style components

- E1 Air compressor
- E3 System air pressure gauge & valve (N.O.)
- E4 Air pressure supervisory switch (PS40-1) (PS40-2 for NYC)
- E9 Float check valve
- E10 Soft seat check valve
- E11 Air compressor check valve
- E12 Air option drain valve (N.C.)
- E15 Air compressor isolating switch (not shown)

4. Air supply options

4.1 Accelerator

The Viking Model E-1 accelerator is a quick-opening device featuring automatic reset. The Viking Model E-1 accelerator is used without the anti-flood device to speed the action of a pneumatic release system on preaction system.

Note : The accelerator is not available for single interlock, electric release configurations.

Operation

The Viking Model E-1 accelerator operates on the principle of unbalanced pressures. As the accelerator is pressurized, air enters the inlet chamber, goes through the screen filter into the middle chamber and through an orifice into the lower chamber. From the middle chamber, air slowly enters the upper chamber through a filtered orifice restriction in the cover diaphragm.

In the SET position, the system air pressure is the same in all chambers. When a sprinkler or release device operates, the pressure in the middle and lower chambers is reduced at the same rate as the system pressure. The orifice restriction in the cover diaphragm restricts the air flow from the upper chamber, temporarily causing higher pressure in the upper chamber.

The pressure differential forces the cover diaphragm down, pushing the actuator rod down. This action vents the pressure from the lower chamber to the outlet vent, allowing residual pressure in the inlet chamber to force the clapper diaphragm open. After the clapper diaphragm opens, any pressure remaining in the inlet chamber and associated piping is vented to atmosphere.

On a pneumatic release system, when the accelerator operates, the outlet pressure is vented to atmosphere, speeding the release system operation.

To enable the accelerator device

1. OPEN the isolation valve of the accelerator.

CAUTION ! The system air pressure should be higher or equal to the upper chamber of the accelerator prior to opening the main water supply valve *(D1)*.

Note : Ensure that the isolation valve of the accelerator is open in normal supervisory mode.

To isolate the accelerator device

This operation can be necessary in order to verify the pressure adjustments or to allow the pressure switches adjustments.

1. CLOSE the isolation valve of the accelerator.

Refer to instructions described on Viking datasheet #122 (form No. 071692).

To reset the accelerator device

Make sure the system is properly drained and reset. Observe the upper chamber pressure of the accelerator. The gauge must read zero before the accelerator will automatically reset. It may be necessary to loosen, remove and re-install the accelerator air gauge (using the appropriate wrench) to vent trapped air pressure from the upper chamber, even when the gauge indicates zero if the air supply is on while performing the reset.

Make sure system is pressurized according to recommended settings.

WARNING ! Do not exceed 60 PSI (414 kPa).

Inspections

1. Check the upper chamber pressure of the accelerator. The air pressure should be equal to the air pressure maintained in the system on which it is installed.

   A difference in pressure other than slight variation due to gauge calibration may indicate gauge malfunction, plugged accelerator orifices and/or filters, or other maintenance is required.

2. Verify that the isolation valve is OPEN.
3. Verify that all other trim valve are in their normal operating position.
4. Check for signs of mechanical damage and/or corrosive activity. If detected, perform maintenance as required or, if necessary, replace the device.
5. Verify that accelerator and trim are adequately heated and protected to prevent freezing and physical damage.

After every operation, and each time water is allowed to enter the system

1. Inspect the interior of the accelerator for the presence of water. Dampness or condensation may indicate that the air supply is not being dried adequately. If water is allowed to enter the middle or upper chamber of the accelerator, it may contaminate the accelerator orifices and prevent it from operating properly.
2. Remove the 1/2"-NPT (15 mm) plug from the base of the accelerator. If water or dampness is present, the accelerator must be disassembled, cleaned and dried. For more information about this procedure, refer to Viking datasheet #122 (form No. 071692).
3. Weekly inspection is recommended unless system is provided with low air supervisory signal, then monthly inspection may be adequate.
4. Check the upper chamber pressure of the accelerator. The air pressure should be equal to the air pressure maintained in the system on which it is installed.

A difference in pressure other then slight variation due to gauge calibration may indicate gauge malfunction, plugged accelerator orifices and/or filters, or other maintenance is required.

Note : Standard tolerance allowance in pressure gauge calibration may result in a slight variation when pressure readings of any two gauges are compared.

5. Verify that all other trim valves are in their normal operating position.
6. Check for signs of mechanical damage and/or corrosive activity. If detected, perform maintenance as required or, if necessary, replace device.
7. Verify that the main water supply valve *(D1)* is OPEN and secure and that the by-pass valve *(1)* is OPEN.

Figure 4 - Accelerator Option

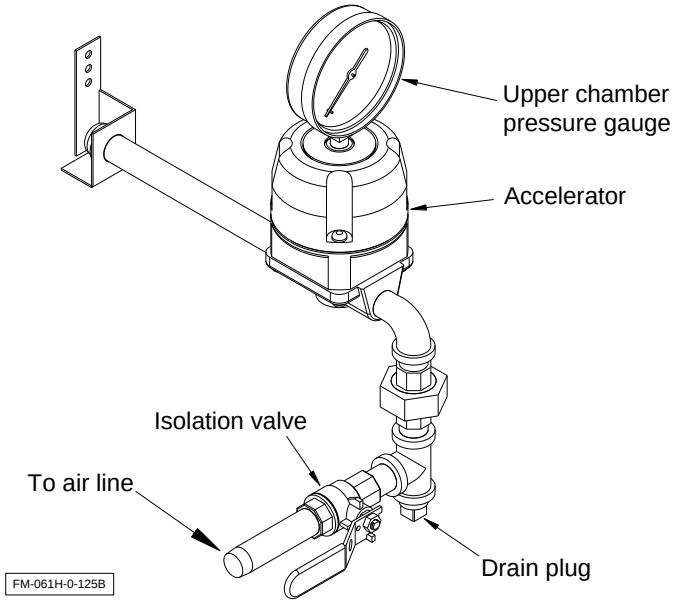

1. Self-contained unit with integrated release control panel

1.1 Product description

The release control panel of the ***TOTALPAC® N2*** system is an add-on unit that is installed inside the cabinet at the factory.

Once the left door is opened, the locked control panel door can be opened to give access to the control panel, the emergency battery compartment, and other related equipment.

A releasing circuit disconnect switch is located at left of the release control panel.

The control panel can be easily flipped once unlatched from the right side, giving access to electrical junction's box of the unit.

1.2 Self-contained unit with Viking VFR-500 release control panel

The Viking release control panel model VFR-500 is a listed and approved, microprocessor based fire control/releasing panel. The battery compartment can hold two 12 volt batteries which are charged by an internal battery charger. Batteries are available to provide up to 90 hours of backup power during AC power failure.

The VFR-500 panel can be used with a wide range of compatible initiating devices such as pull stations, heat detectors (including linear heat detectors), photo-electric and ionization smoke detectors.

For complete compatibility list, please see the Viking VFR-500 Installation, operation and instruction manual provided with the ***TOTALPAC® N2*** unit.

Each ***TOTALPAC® N2*** unit is factory programmed according to system configuration. Field programming for additional modules is possible but will require a waiver from FireFlex Systems since it requires software change. Please consult FireFlex representative for programming information.

A field wiring electrical junction boxes is integrated with the cabinet for connection of detection system, auxiliary contacts and signaling devices. All supply, inputs & outputs are factory wired from the control panel to terminal strips (TBA, TBB & TBC) for contractor's field wiring (see figure 4 and the section **F** ELECTRICAL).

Gauges to indicate air, water supply pressure and priming water pressure are all visible through clear Lexan windows on the left door.

1.3 Technical Data

Cabinet

Steel enclosure: Refer to section **G** CABINET for further details.

Temperature: 39°F (4°C) to 120°F (48°C)

Humidity: 85% relative humidity (non-condensing) at 90°F (32°C) maximum

AC Power

Releasing control panel AC power shall be supplied by a dedicated circuit breaker, as per NFPA 70, Section 760 or Canadian Electrical Code, Section 32.

The panel is available for use with either 120VAC, 60Hz or 220/240VAC, 50/60Hz power supply.

The unit may be provided with an air compressor. Refer to section **D** AIR SUPPLY to determine applicable power requirements.

Note : Branch circuit for the air compressor shall not be the same as the release control panel power source.

1.4 Visual Indicators

Red LED's:

- Initiating device circuit active (7)
- Notification/Release circuit active (4)
- Common alarm
- Discharging/Pre-discharge

Green LED:

- AC power

Yellow LED's:

- Supervisory initiating zone (7)
- Initiating device circuit trouble (7)
- Output circuit trouble (4)
- Power trouble
- Supervisory
- System trouble
- Earth fault
- Signal silenced

LCD Display

The LCD panel displays up to 80 characters of information, ie system messages, status information, trouble conditions, or input changes. It also provides access to main menu and programming functions.

The LCD brightness can be adjusted via holding **ZERO** on the keyboard and pressing **FWD** arrow. The intensity will go from low to high brightness; low brightness will resume once full brightness has been reached.

1.5 Control buttons

UP and DOWN arrows:

Moves/scrolls up or down through menus and events.

BACK and FWD arrows:

Scrolls from left or right to display details if any, of current menu item.

When a left or right arrow is displayed on the LCD, it indicates that more information is available.

Numeric Keypad:

The numeric keypad allows the user to enter the required user codes to access restricted functions. It also allows the user to enter numbers to quickly select menu options within some menus.

ENT pushbutton:

The **ENT** pushbutton within the numeric keypad displays the main menu or selects the currents menu option.

When a blinking right arrow is displayed on the LCD, it indicates the current menu option.

ESC pushbutton:

The **ESC** pushbutton within the numeric keypad returns to previous menu or backs up to previous screen.

ACK pushbutton:

The **ACK** pushbutton acknowledges the current displayed condition. The local buzzer will be silenced once all trouble and supervisory conditions have been acknowledged.

SIGNAL SILENCE pushbutton:

The **SIGNAL SILENCE** pushbutton will silence the local buzzer and all outputs programmed as silenceable. Holding this button for 5 seconds will reactivate silenced outputs.

WARNING ! Alarms initiated from a **WATERFLOW** signal cannot be silenced. The panel must be reset to silence audible devices.

ALARM SIGNAL ON pushbutton:

Hold the **ALARM SIGNAL ON** pushbutton for 5 seconds to activate alarm signal outputs circuits. Note that outputs being classified as second alarm does not activate.

RESET pushbutton:

The **RESET** pushbutton removes power from all initiating circuits and will clear any activated output circuits. If any alarm, supervisory or trouble still exists after reset, they will reactivate the control panel.

1.6 Date & time settings

1. Press **ENT** to enter in main menu.
2. Press **3** to set date and time.
3. Press **BACK** or **FWD** to select field.
4. Press **UP** or **DOWN** to select character; you can also use the numeric keypad.

5 Press **ENT** when settings are done.

6 Press **ESC** to quit menu and return to normal state.

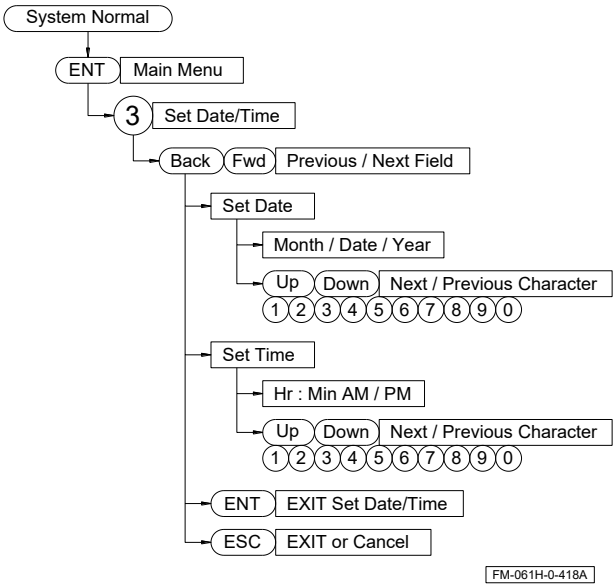

Figure 1 – Cabinet layout

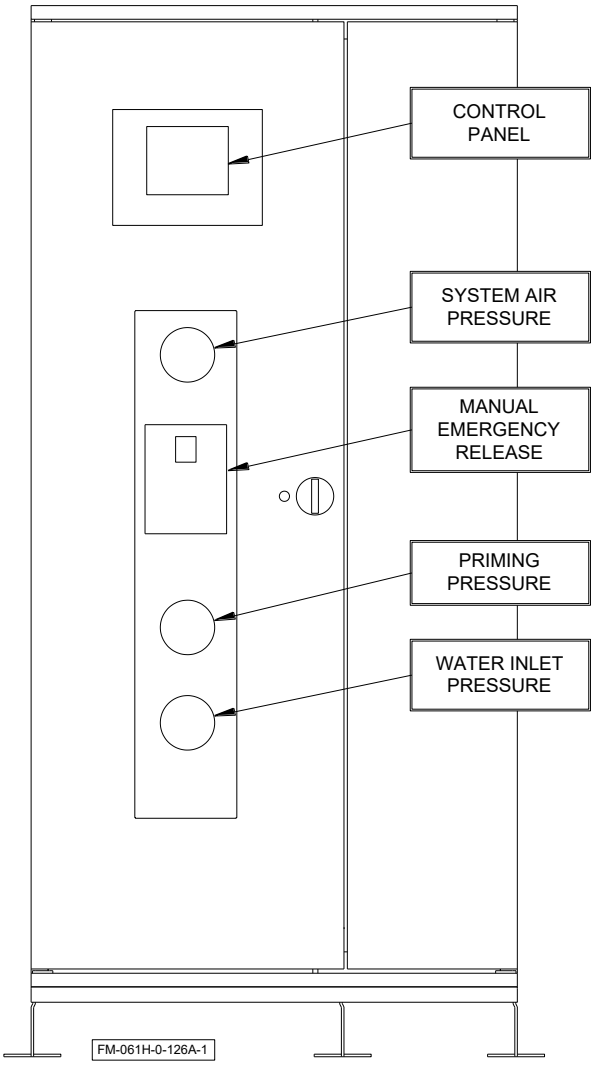

Figure 2 - Control equipment layout

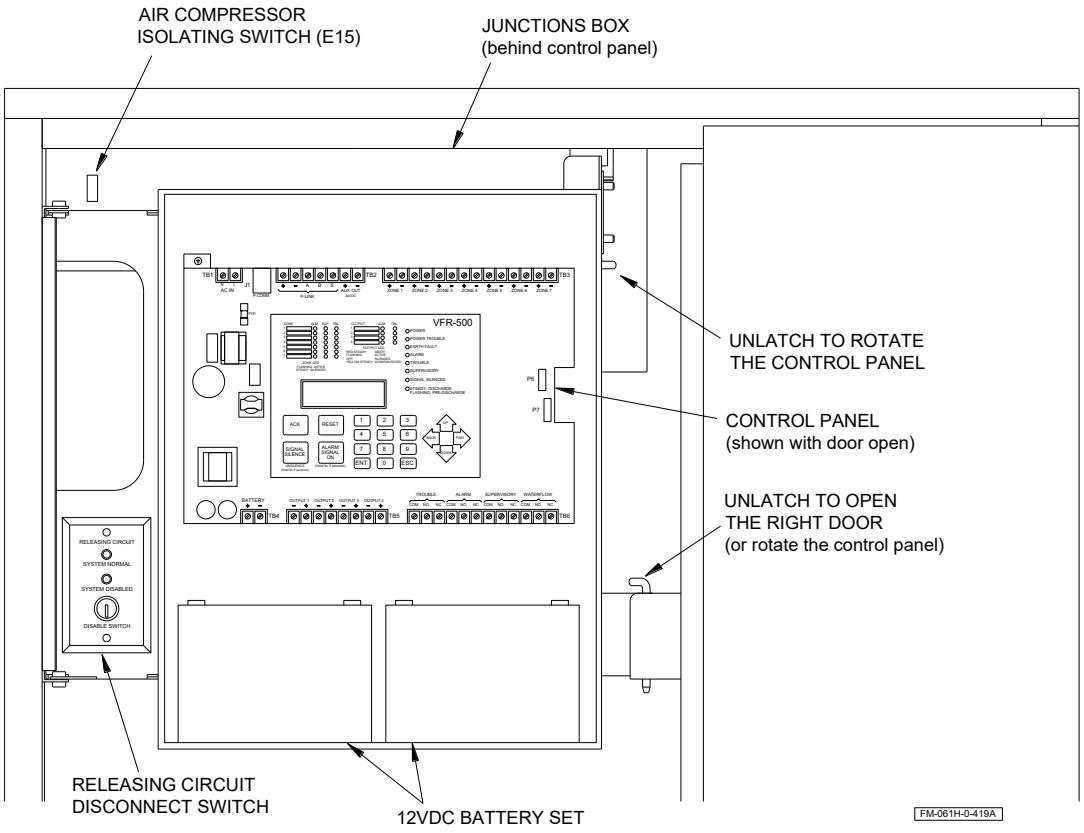

Figure 3 - Detail of VFR-500 User interface

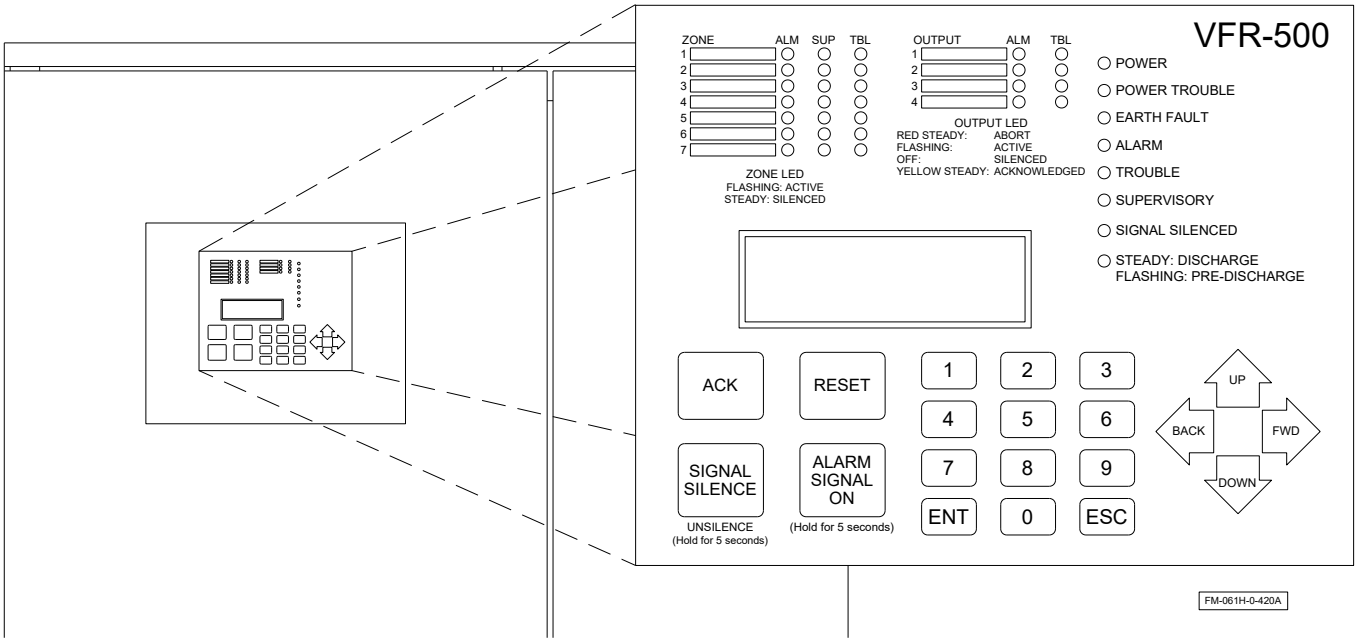

Figure 4 - Junction box layout and detail of wiring routing

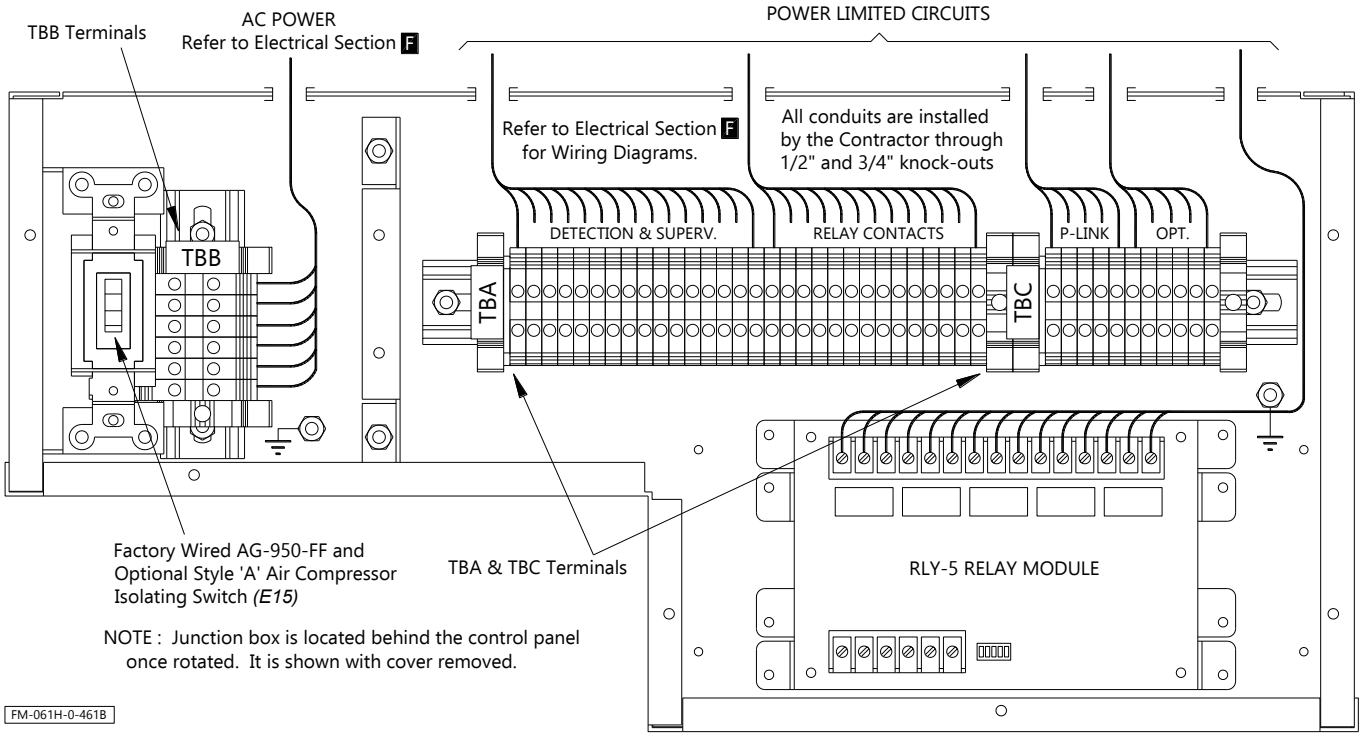

2. Remotely controlled unit

2.1 Product description

The ***TOTALPAC® N2*** preaction remote unit is provided without release control panel. A field wiring electrical junctions box is integrated with the cabinet for connection of pressure switches, supervisory switches, etc. in the trim is factory wired to a terminal strip (TBA & TBC) for contractor's field wiring (see figure 6 and the section **F** ELECTRICAL).

2.2 Technical data

Steel enclosure: Refer to section **G** CABINET for further details.

Environment (electrical section): 39°F (4°C) minimum.

AC Power

The ***TOTALPAC® N2*** unit may be provided with an air compressor. Refer to section **D** AIR SUPPLY to determine applicable power requirements and section **F** ELECTRICAL for contractor's field wiring to terminal strip (TBB).

Figure 5 – Cabinet layout

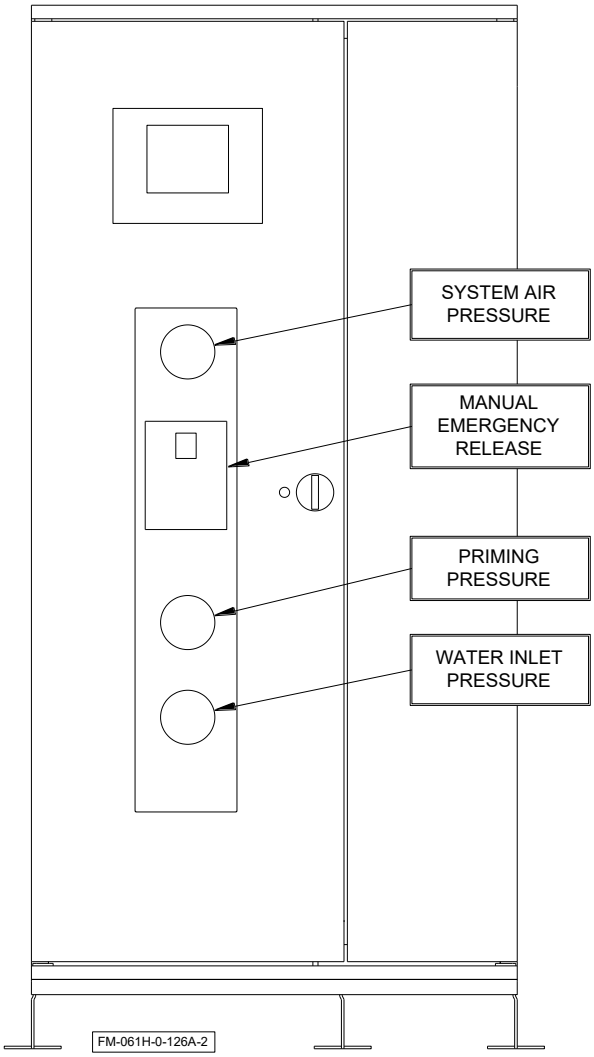

Figure 6 - Junctions box layout for system without release control panel

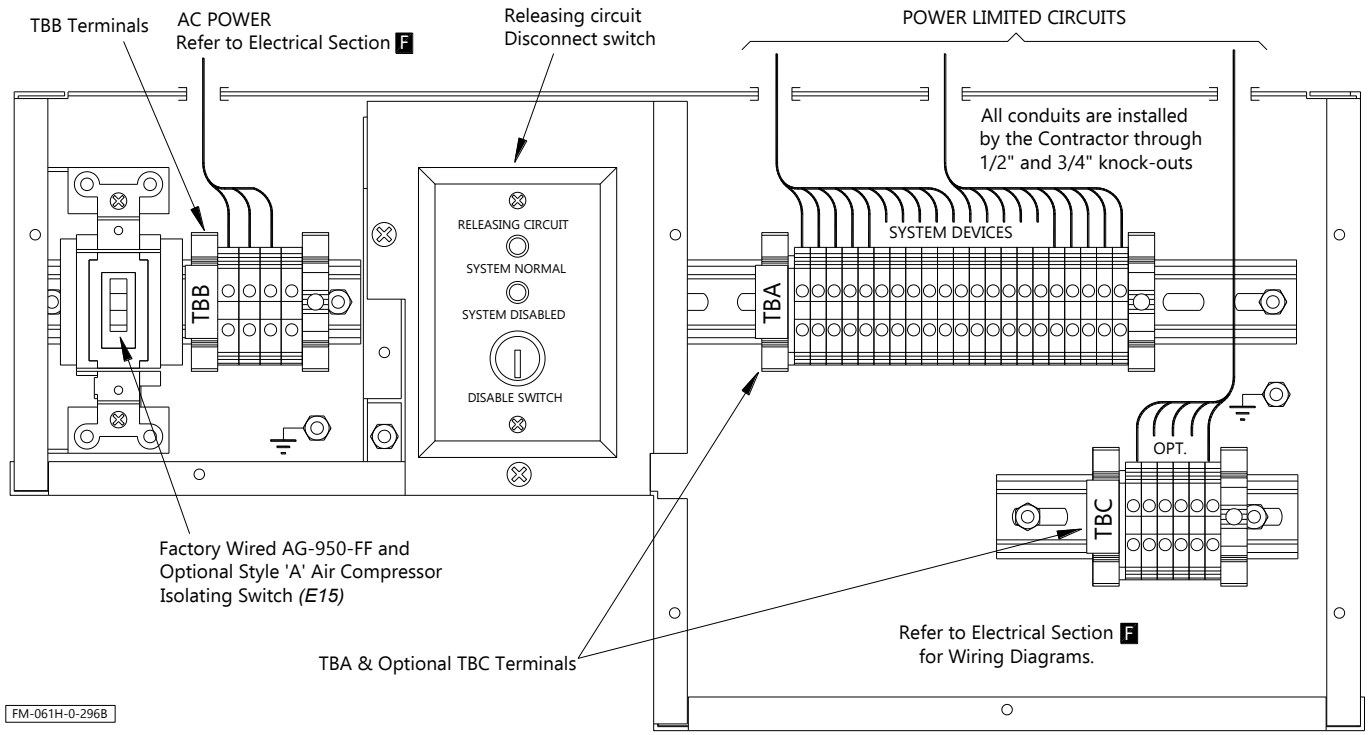

3. ECS® AG-950-FF nitrogen generation control unit

3.1 Product description

The ***TOTALPAC® N2*** preaction unit is provided with a **ECS®** AG-950-FF control panel for nitrogen generation. The unit is integrated within the cabinet and is factory wired to a terminal strip (TBA & TBC) for contractor's field wiring (see figure 7 and the section **F** ELECTRICAL).

Both supervisory devices from the **ECS®** AG-950-FF unit are connected to the same circuit as low air pressure *(E4)* supervisory circuit. The **ECS®** AG-950-FF unit is also supervised against AC power loss (or **POWER** switch to **OFF** position), **FAST FILL** enabled on the HMI screen and air leak limit.

3.2 Technical data

Temperature: 41°F (5°C) to 104°F (40°C)

AC Power

The **ECS®** AG-950-FF section is equipped with its own air compressor. Refer to section **D** AIR SUPPLY to determine applicable power requirements and section **F** ELECTRICAL for contractor's field wiring to terminal strip (TBB).

3.3 ECS® AG-950-FF controls

Refer to figure 7.

POWER switch

When the **POWER** switch is at **OFF** position, AC power is not applied to the control panel or to the air compressor attached to the **ECS®** AG-950-FF section. A supervisory condition is sent to the release control panel as well.

When the **POWER** switch is at **ON** position, AC power is applied to the control panel of the **ECS®** AG-950-FF section. The green lamp of the switch is lit. The following functions are available.

HMI information

The human-machine interface (HMI) display screen allows for easy operation and complete control of the nitrogen generator. Access to nitrogen generator operation, maintenance, diagnostics and stored historical data is easily obtained through the HMI screen on the nitrogen generator. All of the screens on the HMI are accessible from the Home Screen.

Home screen

The Home Screen displays nitrogen supply line pressure, nitrogen generator cut-in and cut-out pressures, nitrogen generator status, nitrogen generator running hours and cycles. The Home Screen also provides access to the Venting Settings screen, Main Menu screen and **FAST FILL** function.

FAST FILL

When **FAST FILL** is disabled on the Home screen of the HMI, the **ECS®** AG-950-FF unit generates nitrogen.

When **FAST FILL** is enabled on the Home screen of the HMI, the **ECS®** AG-950-FF unit applies power to the **ECS®** AG-950-FF air compressor or the auxiliary compressor (refer to section **D** AIR SUPPLY). Nitrogen is not generated.

FAST FILL must be disabled under normal condition.

WARNING ! If **FAST FILL** is enabled for more than 1 hour, an audible sounder is activated from the **ECS®** AG-950-FF unit, and a supervisory condition is given on the VFR500 control panel if applicable.

Venting Settings screen

The Venting Settings screen displays the nitrogen purity levels, venting operations and the total venting time. When the **START VENTING** button is pressed in the Venting Settings screen, the **ECS®** AG-950-FF energizes the solenoid on the SMART Vent to begin the 14-day venting process.

Main menu screen

The Main Menu Screen provides access to the Operation Settings Screen, Alarms Settings Screen, Communication Settings Screen, Historical Data Screen, System Settings Screen and the Information Screen.

Operation settings screen

The Operation Settings Screen provides access to configure the cut-in (turn-on) and cut-out (turn-off) pressure of the air compressor of the **ECS®** AG-950-FF.

To adjust cut-in and cut-out pressures through the HMI:

1. Press the **MAIN MENU** button on the Home screen of the HMI.
2. Press the **SYSTEM SETTINGS** button.
3. Press the numerical display under the Cut-in Pressure. A keypad will be displayed. Edit the number using the keypad to adjust the cut-in pressure.
4. Press the **ENTER** button on the keypad to finish editing.
5. To adjust the cut-out pressure, the operating pressure must be adjusted first. Repeat steps 3 and 4 for the Operating Pressure instead of the Cut-in Pressure.
6. Repeat steps 3 and 4 for the Cut-out Pressure.

WARNING Any adjustments of the air supply settings, low air switch and PSV-D SMART vent settings should be verified by the appropriate authority. Any deviations from the pressure settings indicated in table 2 to table 5 section **D** AIR SUPPLY may affect operation of the system and nitrogen generator efficiency.

Leak limit buzzer

The buzzer is energized when the **ECS®** AG-950-FF air compressor is running for more than 4 (four) hours indicating possible air leak. A supervisory condition is sent to the release control panel as well.

Output flow gauge

The meter displays the air flow from the air compressor under nitrogen generation. A ball valve to enable the gauge is located behind the **ECS®** AG-950-FF control panel. The valve shall be closed under normal condition.

Nitrogen reading port

This is a quick connect port for connection to a nitrogen analyzer to read the nitrogen level.

Figure 7 - ECS® AG-950-FF control panel layout

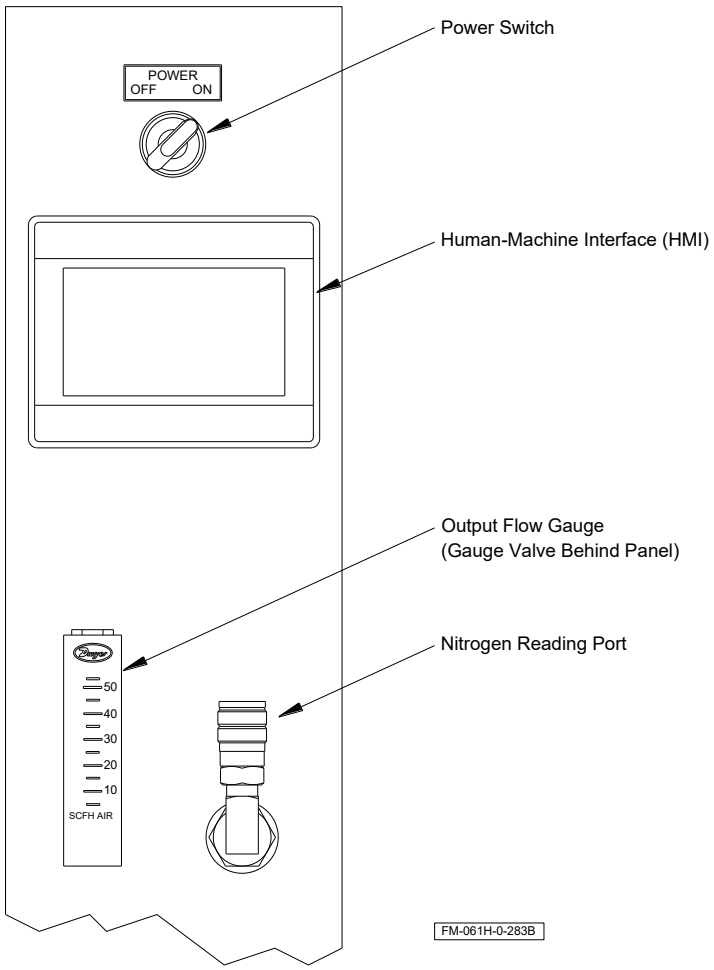

3.4 ECS® PSV-D SMART vent assembly

The **ECS**® PSV-D SMART vent assembly is installed within the ***TOTALPAC® N2*** unit. It provides an automatic oxygen venting inside sprinkler piping network. A restricted orifice allows oxygen to be vented at a control rate to achieve a minimum concentration of 98%. A levered float prevents water to reach the restricted orifice when water enters the sprinkler piping network. A backpressure regulator prevents total system depressurization from the vent assembly. A quick-connect fitting allows the attachment to the optional SMART gas analyzer (see section **C** TRIM OPTIONS).

The **ECS**® PSV-D SMART vent assembly is equipped with a N.C. solenoid valve. The solenoid valve is opened by the VENT function of the **ECS**® AG-950-FF unit. It closes automatically after 14 days via the VENT function when the desired nitrogen concentration has been reached.

Any adjustments to cut-in and cut-out pressure settings will affect the backpressure regulator settings. The backpressure regulator settings shall coincide with cut-in and cut-out pressure settings according to table 4 and 5 of section **D** AIR SUPPLY.

An isolation valve helps to adjust the pressure settings of the backpressure regulator. While solenoid valve is opened by the VENT function, pull the knob out from the regulator to adjust pressure setting. Turn the knob clockwise to raise the pressure, counterclockwise to lower the pressure. Close the ball valve and allow the vent to depressurize through restricted venting orifice to pressure setting. Make adjustment to pressure setting using the knob, then open ball valve to pressurize the vent and close ball valve again to check pressure setting. Repeat process until desired pressure setting is achieved. Push knob back into regulator until it clicks into place. Once the nitrogen generator system has been commissioned, open the isolation ball valve on the vent assembly. The isolation valve shall be left opened for SMART vent operation.

Figure 8 - ECS® PSV-D SMART vent assembly

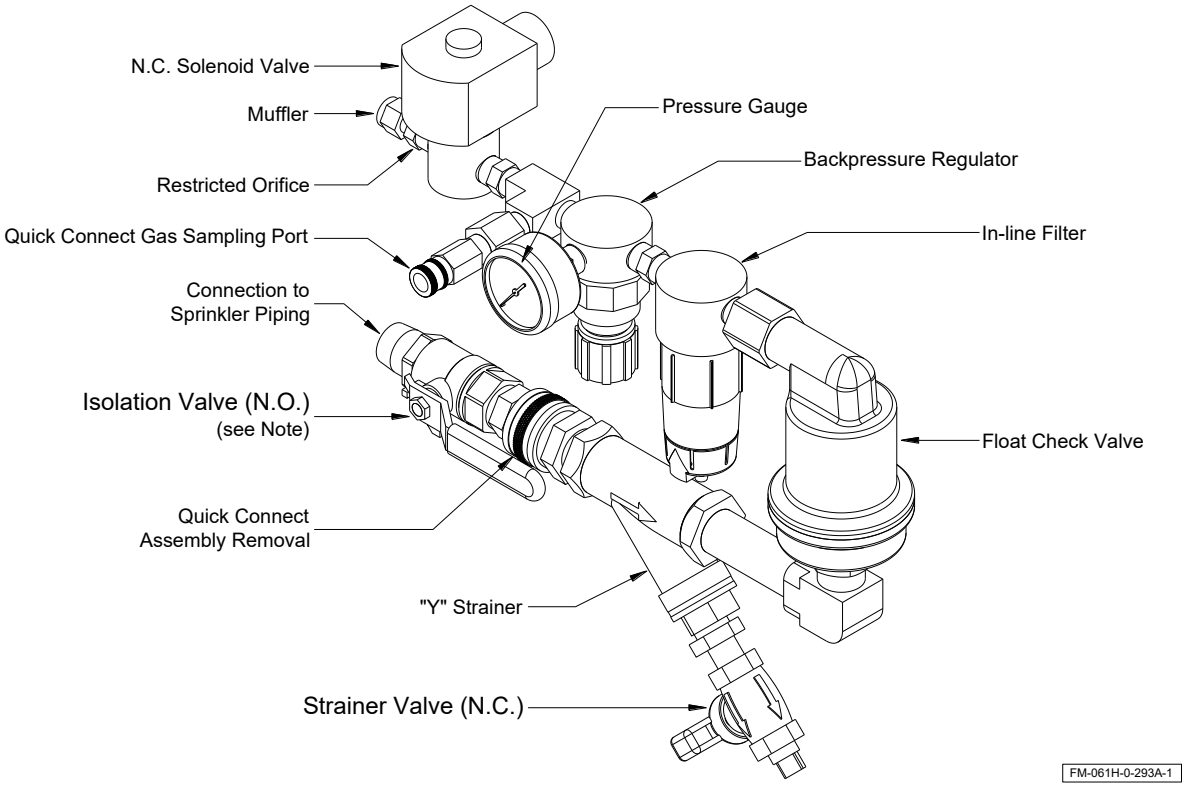

1. Self-contained configurations

The Viking VFR-500 releasing control panel integrated within the ***TOTALPAC® N2*** unit is factory wired and programmed with the configuration selected at the time of purchase.

All field wiring is to be wired to the contractor wiring junction box and terminals provided (TBA, TBB & TBC).

WARNING Only the following pre-configured programs are Listed/Approved with the actual ***TOTALPAC® N2*** unit. Changing the program will require a waiver from FireFlex Systems as it may alter the fire protection capabilities of the system and/or void Listing/Approval and warranty. Please consult FireFlex representative before making any change.

1.1 Releasing circuit disconnect switch

A key switch located at left of the release control panel, allows the user to electrically disconnect the N.C. solenoid valve for maintenance purpose. A supervisory signal and a trouble signal are present at the release control panel.

When disabled, the ***TOTALPAC® N2*** unit remains operational with the opening of the manual emergency release valve, unless the main water supply valve is closed.

1.2 Electric/pneumatic release (single zones)

- **Program #1 Operation:** Single hazard, two alarm zones, one manual release zone, one water flow zone and two supervisory zones.

On activation of **either** ZONE 3 (detection) **or** ZONE 4 (detection), or the activation of ZONE 6 (manual release), the system alarm audible devices sound and if required, can be silenced manually. The N.C. (normally closed) solenoid valve of the system is energized. When air pressure is released from the piping network, it allows the water to escape from the priming chamber of the deluge valve. The clapper of the deluge valve opens, filling the outlet chamber and sprinklers piping network with water. The ZONE 5 (water flow) is activated. System water flow audible devices and the water motor gong (if installed) will sound. Water is discharged through opened automatic sprinklers.

Note: When ZONE 5 (water flow) is activated, the alarm audible devices sound and cannot be silenced.

On activation of ZONE 1 (low air pressure) or ZONE 2 (valve tamper), supervisory audible devices will sound.

Table 1 - Program #1 Operation: Output and relay circuits activated by input circuits

PROGRAM #1 Operation DOUBLE INTERLOCK PREACTION ELECTRIC/PNEUMATIC RELEASE (SINGLE ZONES)			OUTPUT CIRCUITS (NAC)				RELAY CIRCUITS				EVENTS	
			1	2	3	4						
INPUT CIRCUITS			ALARM BELL	WATERFLOW BELL	RELEASE SOLENOID	SUPERVISORY BELL	TROUBLE RELAY	ALARM RELAY	SUPERVISORY RELAY	WATERFLOW RELAY	PREACTION FILLING WITH WATER	PREACTION RELEASING IN HAZARD
SUPERVISORY ZONE	1	Low air pressure [3]				**A**	**T**		**A**			
	2	Valve tamper [2]				**A**	**T**		**A**			
ALARM ZONE	3	Heat/smoke detectors	**A**		**A**		**T**	**A**				
	4	Heat/smoke detectors	**A**		**A**		**T**	**A**				
	5	Water flow	**A**	**A**			**T**	**A**		**A**		
	6	Manual release	**A**		**A**		**T**	**A**				
EVENTS		Opening of a sprinkler without DETECTION ZONE				**E**			**E**			
		Opening of a sprinkler after DETECTION ZONE									**E**	**E**
		AC power failure [1]					**E**					
		Battery failure					**E**					
		NAC open/short circuit					**E**					
		Ground fault					**E**					

A = Alarm activated (on short circuit) **T** = Trouble activated (on open circuit) **E** = Event actuated

(1) Trouble relay will activate 90 minutes after trouble LED and local buzzer.

(2) Also activated by releasing circuit disconnect switch or the optional shut-off valve.

(3) Also activated by **ECS®** fast fill, leak monitor, power monitor or corrosion detector.

1.3 Electric/pneumatic release (crossed zones)

- **Program #12 Operation:** Single hazard, two alarm zones, one manual release zone, one water flow zone and two supervisory zones.

On activation of **both** ZONE 3 (detection) **and** ZONE 4 (detection), or the activation of ZONE 6 (manual release), the system alarm audible devices sound and if required, can be silenced manually. The normally closed (N.C.) solenoid valve of the system is energized. When air pressure is released from the piping network, it allows the water to escape from the priming chamber of the deluge valve. The clapper of the deluge valve opens, filling the outlet chamber and sprinklers piping network with water. The ZONE 5 (water flow) is activated. System water flow audible devices and the water motor gong (if installed) will sound. Water is discharged through opened automatic sprinklers.

Note: When ZONE 5 (water flow) is activated, the alarm audible devices sound and cannot be silenced.

On activation of ZONE 1 (valve tamper) or ZONE 2 (low air pressure), supervisory audible devices will sound.

Table 2 - Program #12 Operation: Output and relay circuits activated by input circuits

PROGRAM #12 Operation DOUBLE INTERLOCK PREACTION ELECTRIC/PNEUMATIC RELEASE (CROSSED ZONES)			OUTPUT CIRCUITS (NAC)				RELAY CIRCUITS				EVENTS	
			1	2	3	4						
INPUT CIRCUITS			ALARM BELL	WATERFLOW BELL	RELEASE SOLENOID	SUPERVISORY BELL	TROUBLE RELAY	ALARM RELAY	SUPERVISORY RELAY	WATERFLOW RELAY	PREACTION FILLING WITH WATER	PREACTION RELEASING IN HAZARD
SUPERVISORY ZONE	1	Valve tamper [2]				**A**	**T**		**A**			
	2	Low air pressure [2]				**A**	**T**		**A**			
ALARM ZONE	3	Heat/smoke detectors	**A**		**X**		**T**	**A**				
	4	Heat/smoke detectors	**A**				**T**	**A**				
	5	Water flow	**A**	**A**			**T**	**A**		**A**		
	6	Manual release	**A**		**A**		**T**	**A**				
EVENTS		Opening of a sprinkler without DETECTION ZONE				**E**			**E**			
		Opening of a sprinkler after DETECTION ZONE									**E**	**E**
		AC power failure [1]					**E**					
		Battery failure					**E**					
		NAC open/short circuit					**E**					
		Ground fault					**E**					

A = Alarm activated (on short circuit) **T** = Trouble activated (on open circuit) **E** = Event actuated **X** = Crossed zones

(1) Trouble relay will activate 90 minutes after trouble LED and local buzzer.

(2) Also activated by releasing circuit disconnect switch or the optional shut-off valve.

(3) Also activated by **ECS**® fast fill, leak monitor, power monitor or corrosion detector.

Figure 1 - Field wiring diagrams

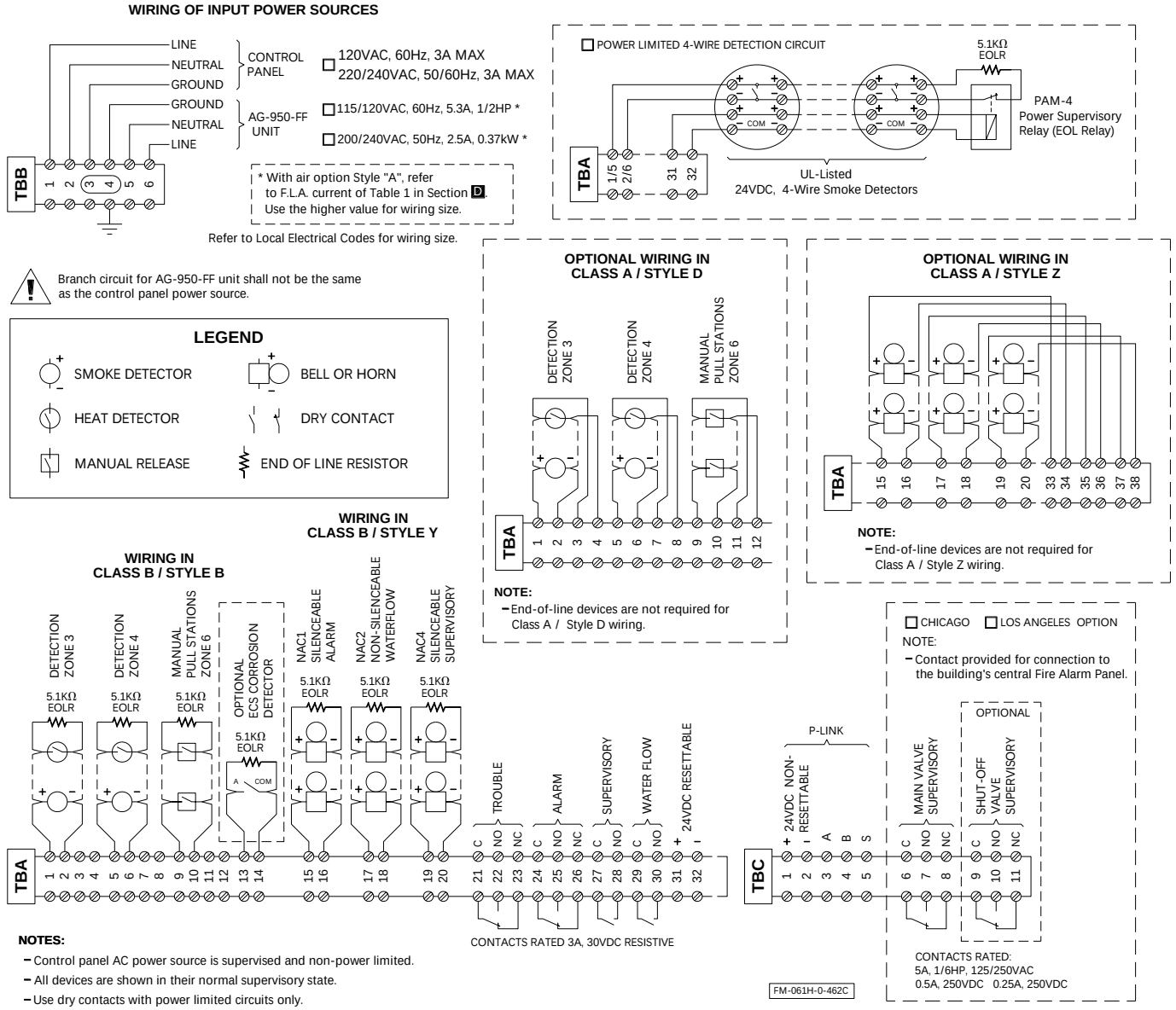

Refer to the VFR-500 release control panel manual for device compatibility.

Power limited (supervised) initiating device circuits

Zones 3 (detection), 4 (detection) and 6 (manual release):

Max. loop resistance: 100Ω

Max. linear heat cable resistance: 700Ω

Max. wiring capacitance: 20µF

Max. wire length: 10 000ft (3048m)

End of line: 5.1K ohms, 1/4W

Leave ELR (provided) on all unused circuits.

Auxiliary power 24Vdc regulated source

Max. current available: 1.0A

Total current available (including NAC): 3.0A

Resettable for 4 wires smoke detectors

Power limited (supervised) notification appliance circuits

Output circuits 1, 2 and 4:

Maximum usable current per circuit: 3.0A

Total current available (all circuits): 3.0A

End of line: 5.1KΩ, 1/4W

Polarity is reversed in supervisory condition.

Leave ELR (provided) on all unused circuits.

2- Optional Modules

2.1 Relay module RLY-5

The RLY-5 is an auxiliary relay module designed to operate with the VFR-500 release control panel to provide an additional 5 independent form C relay outputs.

The RLY-5 is factory installed inside the junction box.

The release control panel communicates with the RLY-5 via the factory wired P-LINK and 24VDC auxiliary power connections from the VFR-500.

The address of the RLY-5 is assigned at factory. The VFR-500 is configured accordingly.

Each relay operation is factory defined.

Note: Reassigning the relay operation will require a waiver from FireFlex Systems since it requires software change. Please consult FireFlex representative for different relay operation.

Figure 2 – RLY-5 wiring

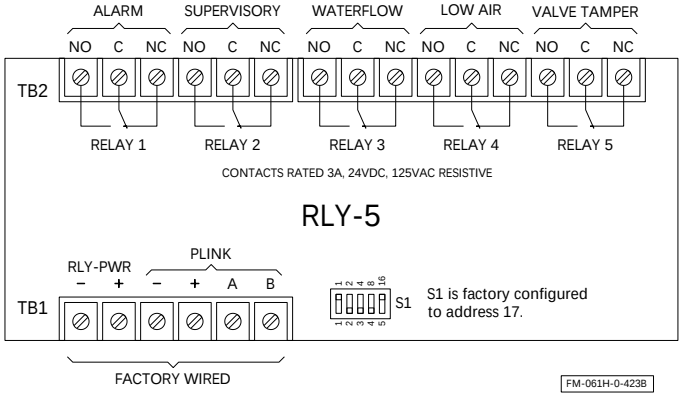

Table 4 - DIP switches address settings

Each module has its own address. This address must match the address being configured within the VFR-500 panel.

	DIP Switch Settings				
	1	2	3	4	5
Address	1	2	4	8	16
1	■				
2		■			
3	■	■			
4			■		
5	■		■		
6		■	■		
7	■	■	■		
8				■	
9	■			■	
10		■		■	
11	■	■		■	
12			■	■	
13	■	■	■	■	
14		■	■	■	
15	■		■	■	

	DIP Switch Settings				
	1	2	3	4	5
Address	1	2	4	8	16
16					■
17	■				■
18		■			■
19	■	■			■
20			■		■
21	■		■		■
22		■	■		■
23	■	■	■		■
24				■	■
25	■			■	■
26		■		■	■
27	■	■		■	■
28			■	■	■
29	■		■	■	■
30		■	■	■	■
31	■	■	■	■	■

A shade box indicates an ON-state DIP switch; a white box indicates an OFF-state DIP switch.

2.2 Remote Annunciator RA-4410G3

The RA-44410G3 remote annunciator is designed to operate with the VFR-500 release control panel. It contains 37 LED's to indicate a change in release control panel status. A local buzzer on the annunciator sounds for any trouble or supervisory condition.

An LCD panel displays up to 80 characters of information, ie system messages, status information, trouble conditions, or input changes.

The release control panel is linked to the RA-4410G3 annunciator via supervised separate connections for the P-LINK communication and the 24VDC power requirement. Separate cables should be used for communication and power.

The address of the RA-4410G3 must be correctly assigned. The VFR-500 must be configured accordingly.

Note: Adding an annunciator will require a waiver from FireFlex Systems since it requires software change. Please consult FireFlex representative for remote annunciator add-on.

Figure 3 - RA-4410G3 wiring to TBC

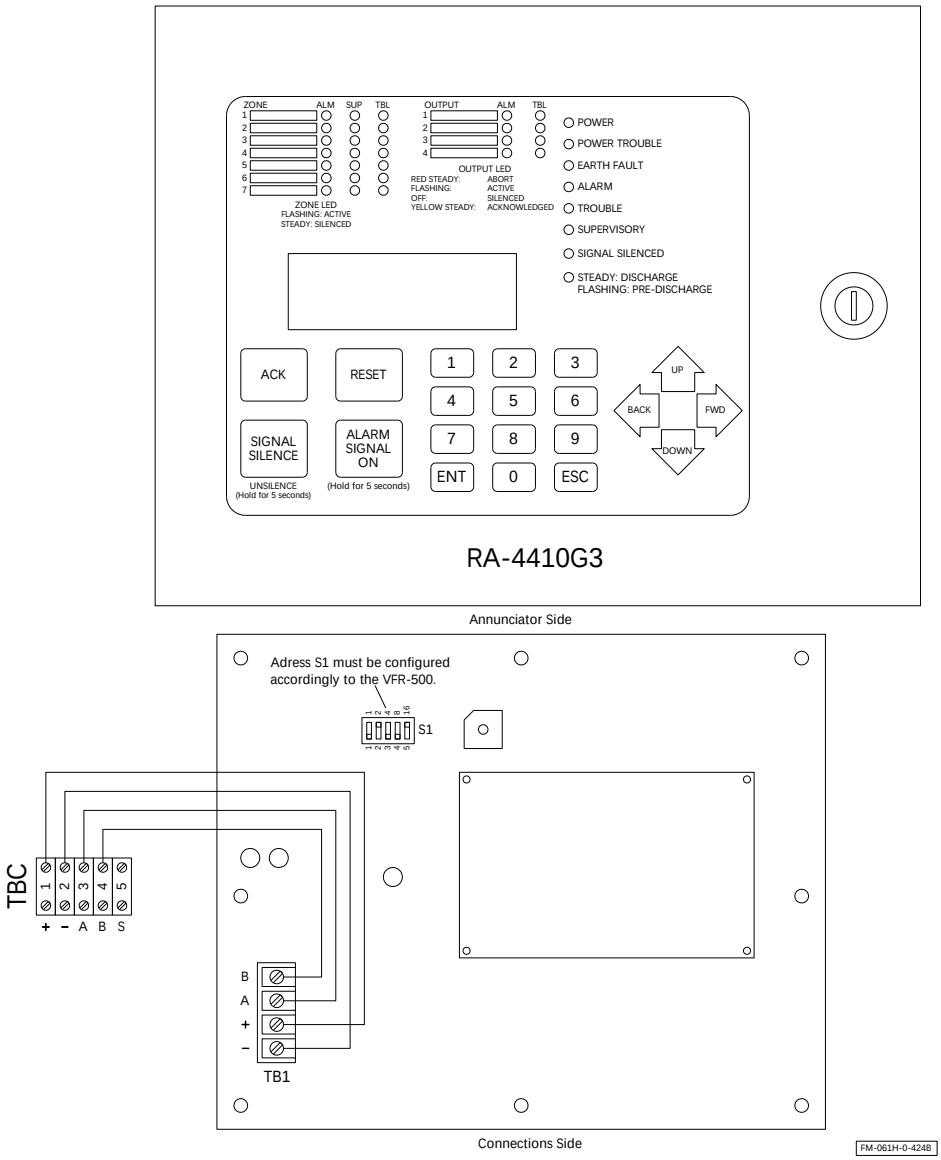

3. Remotely controlled configuration

The ***TOTALPAC® N2*** remote controlled unit is provided without an integrated control panel since all internal supervisory and releasing devices are to be connected and supervised from a remote releasing control panel.

The remote releasing control panel shall be Listed and be compatible for sprinklers supervisory and alarm contact devices and be compatible for supervising and releasing 24VDC solenoid valve.

The remote releasing control panel is to be wired to the contractor wiring junction box and terminals provided (TBA, TBB & optional TBC) as shown in figure below.

Note : No connection should be made directly in the trim components as this would void warranty and might prevent the normal operation of the unit.

Make sure the system will perform as required and is tested to confirm it meets all requirements, as described in section **B** MECHANICAL).

Figure 4 –Field wiring diagrams

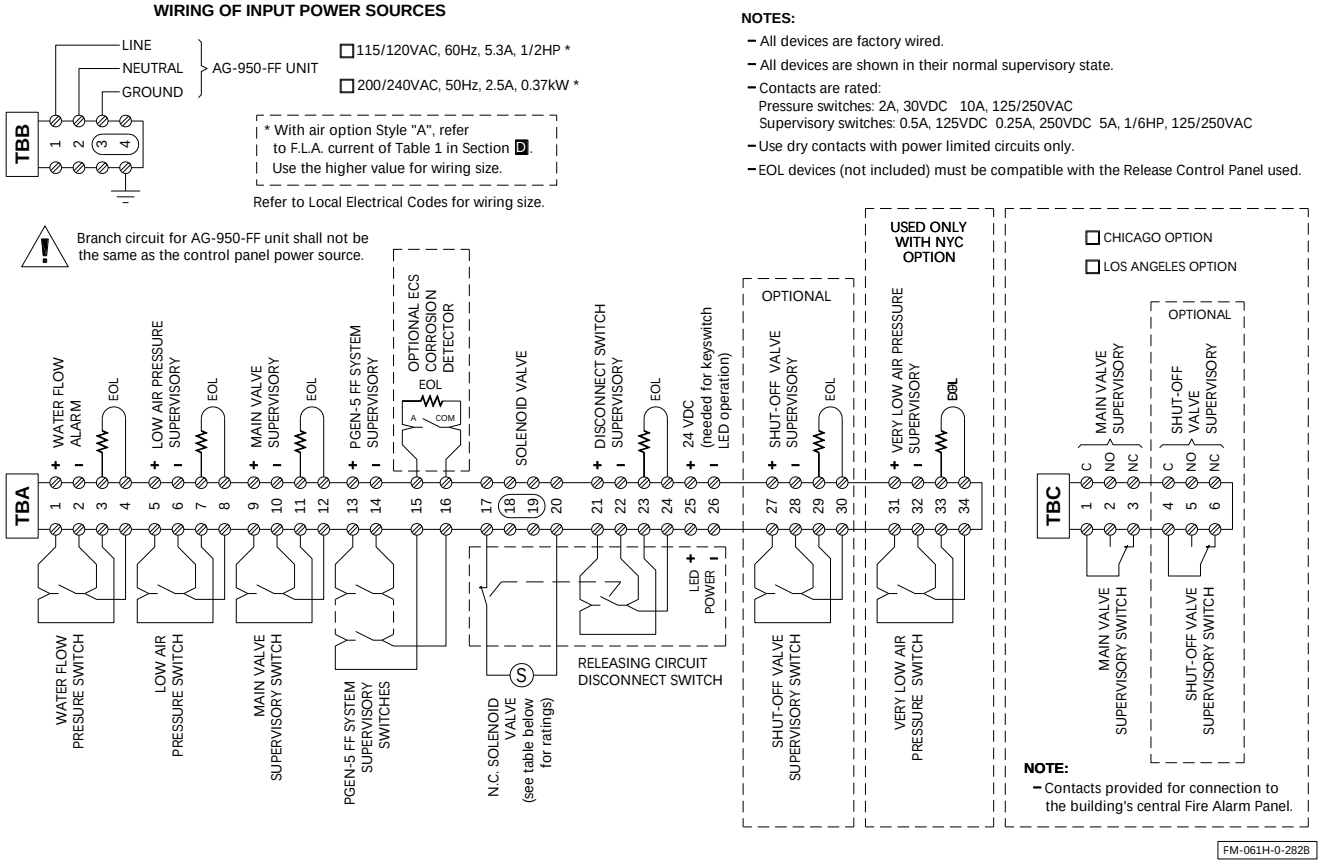

Table 5 - Solenoid valve electrical ratings

Viking P/N	Operation (de-energized)	Voltage	Watts	DC amp
11591	N.C.	24VDC	10W	416mA

Notes:

1. Solenoid valve is UL Listed as Fire Protection Special System Water Control Release Service (UL 429A Product category VLTR).
2. Voltage drop: For proper operation, make sure that voltage at the solenoid valve is at least 85% of nameplate rating.

3.1 Releasing circuit disconnect switch

A key switch located at the front of the junctions box, allows the user to electrically disconnect the N.C. solenoid valve for maintenance purpose. A supervisory contact is to be wired to the release control panel.

When disabled, the ***TOTALPAC® N2*** unit remains operational with the opening of the manual emergency release valve, unless the main water supply valve is closed.

This page is left intentionally blank.

1- Cabinet for TOTALPAC® N_2 unit

The ***TOTALPAC® N2*** unit cabinet is made of sturdy 14 gauge steel. Bottom base is made of 11 gauge and 7 gauge steel. Cabinet is available in two (2) sizes:

- 35¾" x 25" x 77" (908mm x 640mm x 1960mm) for 2" (50mm) system
- 46" x 25" x 77" (1170mm x 640mm x 1960mm) for 3" (80mm), 4" (100mm) and 6" (150mm) systems

All external and internal surfaces are rust proof coated, inside and outside, with fire red, oven baked polyester powder on phosphate base. Cabinet is provided with two doors, both provided with a neoprene gasket to absorb vibrations.

The cabinet unit is pre-assembled, pre-wired and factory tested under ISO-9001 specifications. Each cabinet door is provided with hinges that can be disassembled on site to remove the door assemblies for servicing.

Note Ground wire has to be disconnected prior to remove a door. It must be reconnected once the door is reinstalled.

Gauges to indicate water supply pressure, priming water pressure and vacuum pressure are all visible through clear Lexan windows.

Multiple units installation is easily achieved by jointing manifold sections together at their water inlets. Drains outlet shall remain separate and open for each unit. Refer to figure 6 OPEN DRAIN DETAILS FOR MULTIPLE UNITS.

IMPORTANT ! ***TOTALPAC® N2*** unit is NOT designed to be installed where it will be subjected to outdoors and/or freezing conditions. Refer to paragraph 3 ENVIRONMENT in section **A** GENERAL DESCRIPTION for additional details. Subjecting the unit to conditions outside these limitations might hamper the normal operation of the system.

The release control panel of the ***TOTALPAC® N2*** system is installed inside the cabinet at the factory. Refer to section **E** CONTROLS for additional information.

Self-contained

A field wiring electrical junctions box is integrated within the cabinet for connection to detection system, auxiliary contacts and signaling devices. All inputs & outputs are factory wired to a terminal strip (TBA, TBB and optional TBC) for contractor's field wiring. Refer to section **F** ELECTRICAL for additional information.

Remote controlled

A field wiring electrical junctions box is integrated within the cabinet for connection of all electrical components in the trim to remotely controlled release control panel. Pressure switches, supervisory switches, etc. are all factory wired to a terminal strip (TBA and optional TBC) for contractor's field wiring. Terminal strip TBB is required for AC power connection to **ECS®** AG-950-FF unit. Refer to section **F** ELECTRICAL for additional information.

Table 1 - System weight in cabinet

System size	Weight [1, 2]
2" (50mm)	623 lb (283 kg)
3" (80mm)	803 lb (346 kg)
4" (100mm)	878 lb (398 kg)
6" (150mm)	1175 lb (533 kg)

(1) Without release control panel. Add 34 lb (15 kg) for ***TOTALPAC® N2*** unit with release control panel & batteries.

(2) Without additional air compressor.

Figure 1 - Cabinet and inlets/outlets dimensions

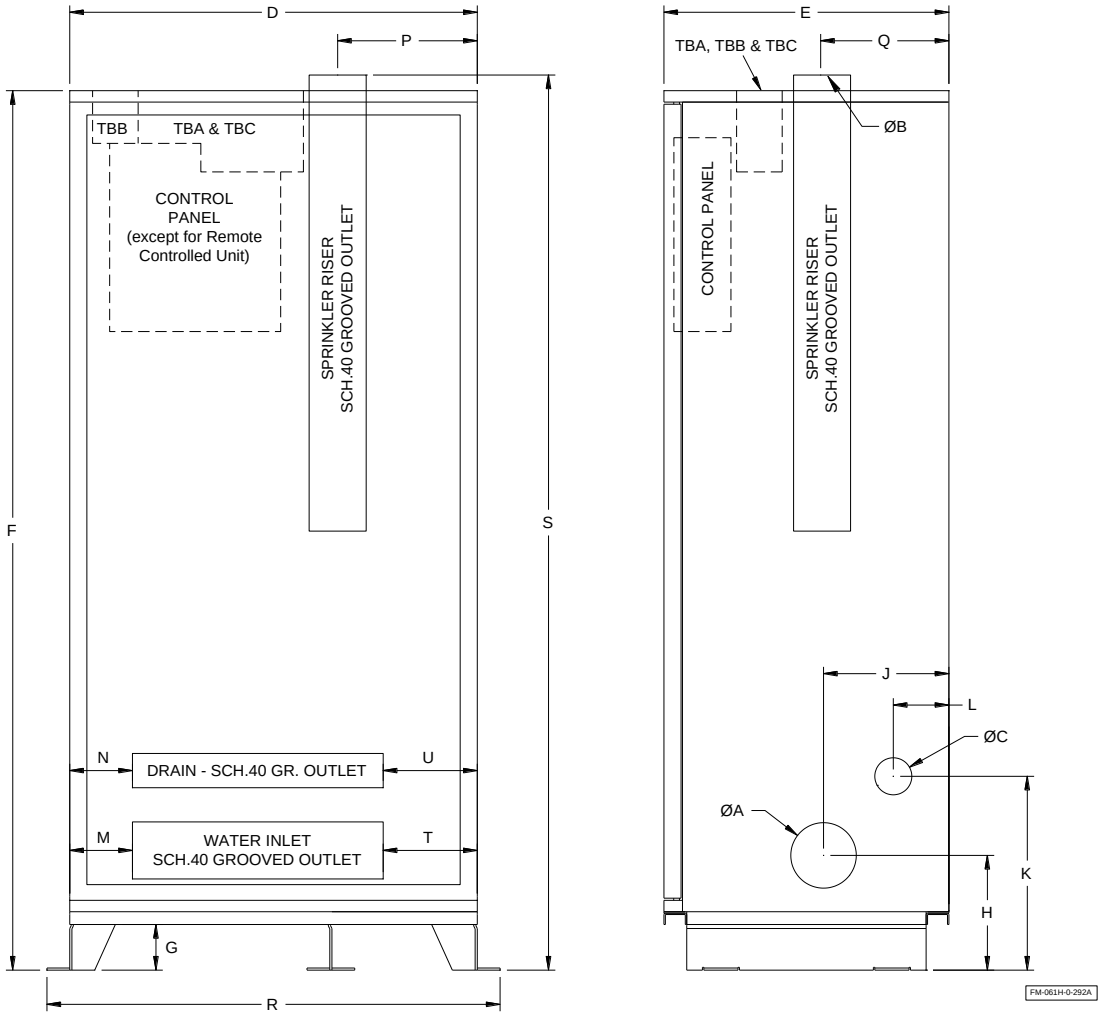

Table 2 - Cabinet dimensions - dimensions are in inches (mm)

Unit size	A	B	C	D	E	F	G	H	J	K	L	M	N	P	Q	R	S	T	U
2" (50)	2" (51)	2" (51)	2" (51)	35¾" (908)	25" (635)	77" (1956)	4" (102)	8¾" (222)	11½" (292)	13¾" (349)	3¾" (95)	2¾" (70)	2¾" (70)	20¾" (527)	11½" (292)	39¾" (1010)	79½" (1994)	15½" (394)	15½" (394)
3" (80)	4" (102)	3" (76)	2" (51)	46" (1168)	25" (635)	77" (1956)	4" (102)	10" (254)	11½" (292)	13¾" (349)	3¾" (95)	2¾" (70)	2¾" (70)	21¾" (552)	11½" (292)	50" (1270)	79½" (1994)	13" (330)	13" (330)
4" (100)	4" (102)	4" (102)	2" (51)	46" (1168)	25" (635)	77" (1956)	4" (102)	10" (254)	11½" (292)	13¾" (349)	3¾" (95)	2½" (64)	2½" (64)	22¼" (565)	11½" (292)	50" (1270)	79½" (1994)	12¾" (324)	12¾" (324)
6" (150)	6" (152)	6" (152)	2" (51)	46" (1168)	25" (635)	77" (1956)	4" (102)	11" (279)	11½" (292)	13¾" (349)	3¾" (95)	5¼" (133)	5¼" (133)	17¾" (451)	11½" (292)	50" (1270)	79½" (1994)	5¼" (133)	5¼" (133)

Notes:

1. Dimensions are nominal and may vary ±¼" (±5mm).

Figure 2 - Floor anchoring dimensions

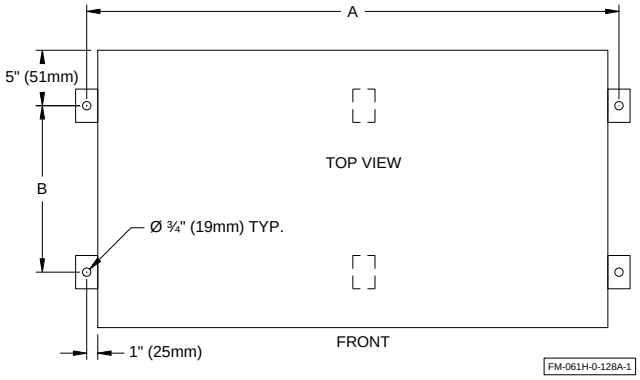

Table 3 - Floor anchoring dimensions

Unit size	A	B
2" (50mm)	37¾" (959mm)	15" (380mm)
3" (80mm)	48" (1220mm)	15" (380mm)
4" (100mm)	48" (1220mm)	15" (380mm)
6" (150mm)	48" (1220mm)	15" (380mm)

Figure 3 - Cabinet & doors clearance detail

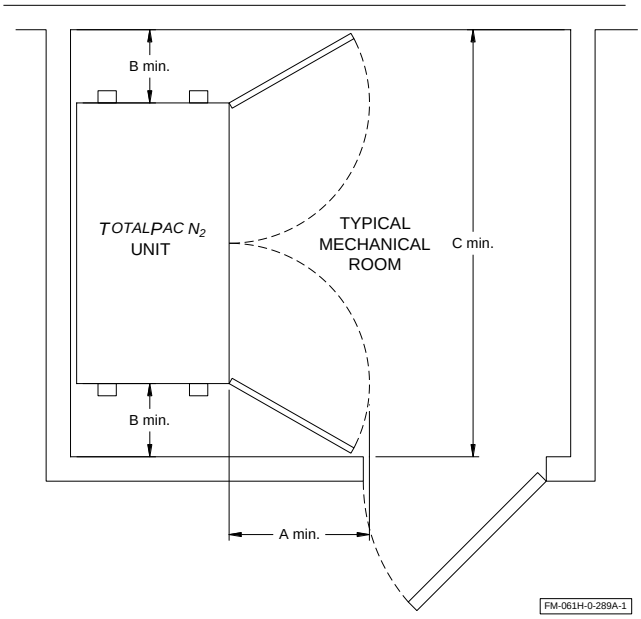

Table 4 - Cabinet clearance dimensions

Unit size	A	B	C
2" (50mm)	24" (610mm)	12" (305mm)	60" (1524mm)
3" (80mm)	24" (610mm)	12" (305mm)	70" (1778mm)
4" (100mm)	24" (610mm)	12" (305mm)	70" (1778mm)
6" (150mm)	24" (610mm)	12" (305mm)	70" (1778mm)

Note : Minimum dimensions are according to door clearance and external piping requirements.

Figure 4 - Knockouts details

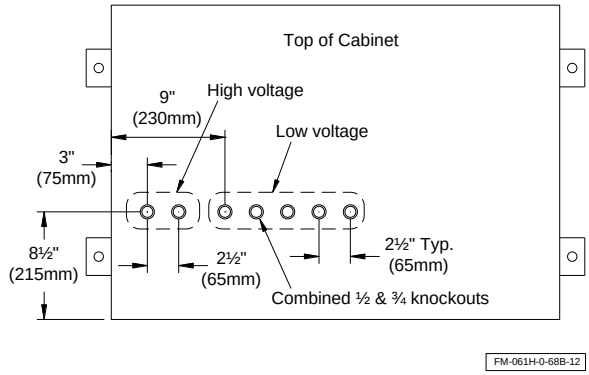

Figure 5 - Open drain details for single unit

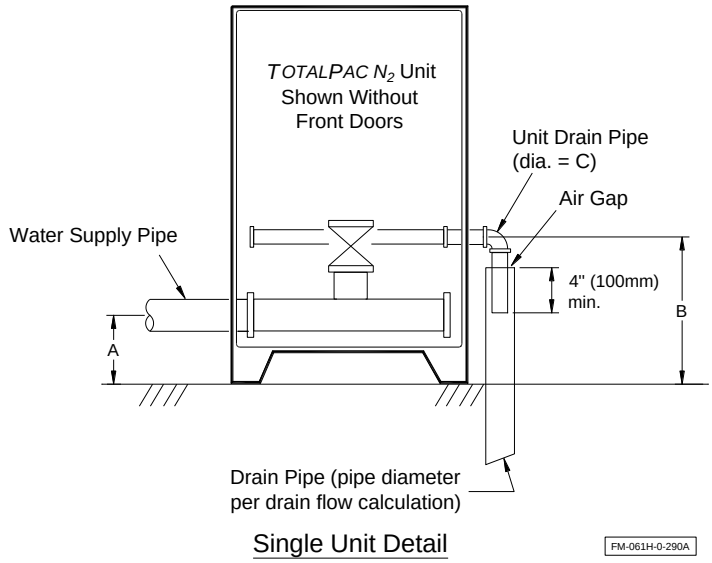

Table 5 - Manifold dimensions

Unit size	A	B	C
2" (50mm)	8¾" (222mm)	13¾" (350mm)	2" (50mm)
3" (80mm)	10" (255mm)	13¾" (350mm)	2" (50mm)
4" (100mm)	10" (255mm)	13¾" (350mm)	2" (50mm)
6" (150mm)	11" (280mm)	13¾" (350mm)	2" (50mm)

Figure 6 - Open drain details for multiple units
(refer to dimensions in table 5)

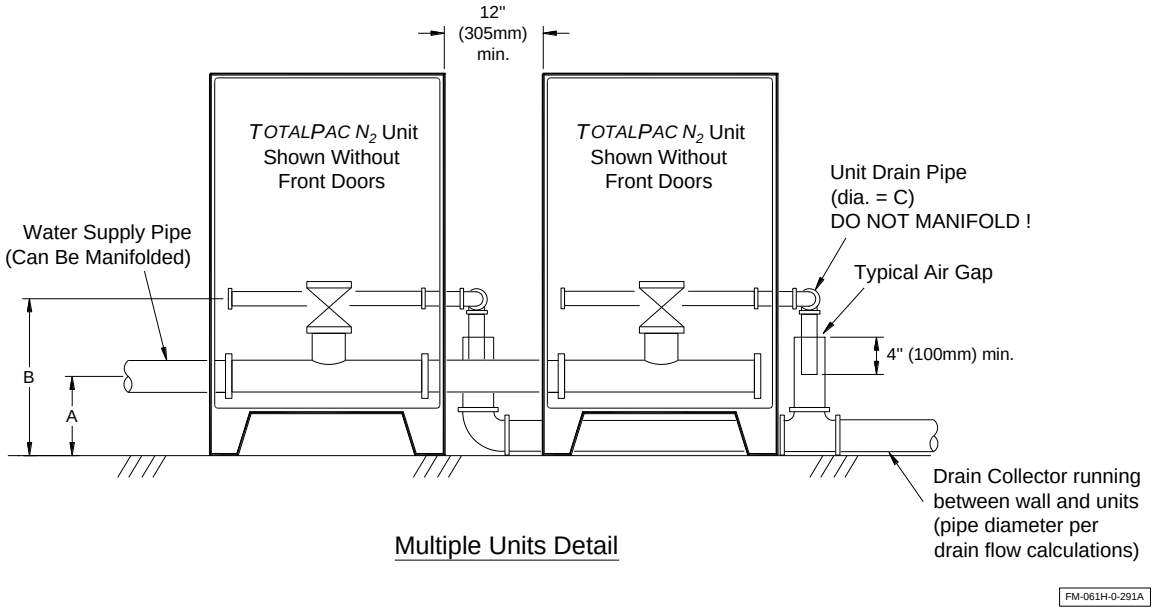

Notes:

1. Water supply and drain pipes can be connected on either sides of cabinet.
2. All pipes and fittings should meet applicable codes.
3. Actual drain collector diameter shall be determined with detailed hydraulic calculations and is the responsibility of the system designer.

Limited Warranty

FireFlex Systems inc. (known herein as "the Manufacturer") warrants to its customer that its products shall be free of defects in material [or part(s)] and workmanship for a period of twelve (12) months from the original shipping date, under normal use and service by the Customer (and provided that the product has been properly installed and maintained).

The obligation of the Manufacturer in case of a claim made by the Customer hereunder, shall be, at the Manufacturer's option, limited to repair or replace, free of charge for parts or his labor, any product or part, which in the opinion of the Manufacturer, shall be proven to be defective. The Manufacturer will NOT accept labor back-charges incurred by the Customer to repair or replace said product or part.

The present warranty shall be void should the product [or part(s)] be altered by anyone other than the Manufacturer. In case of a claim under the present warranty, the Customer must contact the Manufacturer's Customer Service Department as soon as he is aware of a claim and, subject to the authorization of the manufacturer, return the defective product [or part(s)], transportation prepaid, to the address listed below.

This warranty constitutes the entire warranty given by the Manufacturer to the Customer with respect to the product. The present warranty is non-transferable and non-assignable. The Manufacturer does not represent that the products will prevent any loss by fire or otherwise or that the product will in all cases provide the protection for which it has been installed or intended.

The Customer acknowledges that the Manufacturer is not an insurer. The manufacturer shall not be liable for any loss or damages of any nature whatsoever, including but not limited to incidental or special or consequential damages including but not limited to, property damages, personal injury, revenue loss or lost profits, inconveniences, transportation charges or other damages suffered by anyone.

There are no other warranties, expressed or implied with regard to the products, other than those contained herein.

Some jurisdictions may not allow limitations on how long an expressed warranty lasts, so the above limitations may not apply to you. Under no circumstances, shall the Manufacturer be liable for any loss of, or damage to property, direct or indirect, incidental or special or consequential damages, arising out of the use or inability to use the Manufacturer's products. The Manufacturer shall not be liable for any personal injury which may arise in the course of or as a result of the use of the manufacturer's products.

This warranty replaces all previous warranties and is the only warranty given by the Manufacturer with respect to its products. This warranty shall not be modified, unless such modification is made in writing by an executive officer of the Manufacturer.

In consideration of the warranty provisions contained herein, the Customer hereby waives the benefit of any statutory warranty or protection or remedy to which he may be entitled under the terms of any sales of goods act or similar legislation available to him in any jurisdiction in which the Customer carries on business.

Defective part(s) must be returned to the address listed below within (30) days of receiving replacement parts(s). If defective part(s) is not returned before delay expires, an invoice will be issued for replacement part(s) and shipping. On reception, an extended analysis will be performed on the said part(s). If proven to be defective, no invoice will be issued. If the part(s) is proven to be in working condition an invoice will be issued for replacement part(s) and shipping.

Special Limitation: Due to their self-discharge characteristics when not charged during extended storage periods, Batteries supplied with integrated Releasing Control Panels are covered by the above warranty for a period limited to three (3) months only.

FIREFLEX Systems Inc.
1935, Lionel-Bertrand Blvd.
Boisbriand, Quebec
Canada J7H 1N8
Tel.: (450) 437-3473
Fax: (450) 437-1930
Toll Free: (866) 347-3353
Website: **www.fireflex.com**

User Notes